LEVITON®

OmniPro II

AUTOMATION

Control & Security System

Installation Manual

Intrusion and Hold-up System

WEB VERSION

WEB VERSION

CONTENTS

INTRODUCTION **1**
PLANNING **1**

INSTALLATION **2**
CONTROLLER HOOKUP **2**
ABOUT SECURITY ZONES **4**
BURGLAR ZONE HOOKUPS 4
ABOUT FIRE ZONES **5**
TWO-WIRE SMOKE DETECTORS 6
FOUR-WIRE SMOKE DETECTORS 6
TELEPHONE CONNECTIONS **9**
DIGITAL SUBSCRIBER LINE (DSL) CONNECTIONS 9
LCD CONSOLE HOOKUP **11**
CONSOLE SETUP **12**
CONSOLE ADDRESS 12
SOUNDER 12
KEY CLICK 12
KEY BACKLIGHT 12
VIEWING ADJUSTMENT 12
LANGUAGE 12
EXIT SETUP MODE 12
SOUNDER OUTPUTS **14**
INTERIOR SOUNDER HOOKUP 14
EXTERIOR SOUNDER HOOKUP 14
CONTROLLER OUTPUTS **16**
RESET OUTPUTS **16**
OUTPUT APPLICATIONS **16**
GENERAL PURPOSE SWITCHING APPLICATIONS 16
SOUNDER TRIGGERING 16
COMMUNICATOR OUTPUTS 17
“ARMED” AND “OK TO ARM” 17
SWITCHED OUTPUT 17
LEVITON® COMMUNICATING THERMOSTATS 17
REMOTE ARM/DISARM SWITCH **17**
***LEVITON* THERMOSTATS** **19**
PROGRAMMABLE ENERGY SAVER MODULES **20**
TEMPERATURE, OUTDOOR TEMPERATURE, AND HUMIDITY **21**
BUILT-IN SERIAL PORTS **23**
BUILT-IN ETHERNET PORT **24**
CONTROLLER IP ADDRESS, PORT NUMBER, AND ENCRYPTION KEY 24
CONTROLLER IP ADDRESS 25
CONTROLLER PORT NUMBER 25
ENCRYPTION KEY 25
OMNI PRO II ETHERNET CONNECTIONS 25
CONNECTING TO NETWORK VIA PC ACCESS 26

SYSTEM POWER UP PROCEDURE **28**
CONSOLE CHECK OUT **28**
TELEPHONE CHECK OUT **28**
BURGLAR ZONE CHECK OUT **29**
FIRE ZONE CHECK OUT **29**
CUSTOMER CHECKOUT **29**
IN CASE OF TROUBLE **30**
CONSOLES 30
CONTROLLER 30

WEB VERSION

DIGITAL COMMUNICATOR 32
DESCRIPTION OF CONTACT ID 32
OPENING AND CLOSING REPORTS 32

INSTALLER SETUP 33
FIRMWARE UPDATE CODE 33

SETUP MENU 33
SET UP ARMING 33
ENTRY DELAY 33
EXIT DELAY 34
EXIT TIME RESTART 34
UNVACATED PREMISES 34
ENTRY/EXIT CHIME 34
PERIMETER CHIME 34
ALL ON FOR ALARM 34
BEEP ON TROUBLE 34
INSTALLER SETUP MENU 35
SETUP CONTROL 35
X-10 HOUSE CODE 35
UPB™ NETWORK ID 35
UPB PASSWORD: 35
UPB STATUS TIME (STATUS TRACKING): 36
UPB TRANSMIT COUNT 36
X-10 3-PHASE 36
OUTPUT TYPES 36
Z-WAVE® NODE ID 37
SETUP ZONES 38
ZONE EXPANSION 38
ZONE TYPES 39
LATCHING ZONE TYPES 39
DESCRIPTION OF ZONE TYPES 40
SETUP DIGITAL COMMUNICATOR 43
FIRST PHONE NUMBER, FIRST ACCOUNT NUMBER 43
TWO-WAY AUDIO 43
REPORT OPEN/CLOSE 44
REPORT BYPASS / RESTORE 44
AC FAIL REPORT TIME 44
AUTOMATIC TEST TIME 44
SETUP AREAS 45
SETUP AREAS: CONTROL 45
SETUP AREAS: ZONES 45
SETUP AREAS: BUTTONS 45
SETUP AREAS: CONSOLES 46
SET-UP AREAS: THERMOSTATS 46
SETUP AREAS: MESSAGES 46
SETUP TEMPERATURES 47
TEMPERATURE DISPLAY 47
THERMOSTAT TYPE 47
Z-WAVE THERMOSTAT NODE ID 47
SETUP MISCELLANEOUS 48
INSTALLER CODE 48
ENABLE F/W UPDATE (INSTALLER) 48
PC ACCESS CODE 48
CALL BACK PHONE NUMBER 48
OUTSIDE SIREN DELAY 49
DIAL OUT DELAY 49
SIREN RESET TIME 49
ALARM RESET TIME 49

WEB VERSION

ALARM RESTORE LEVEL 49
FIRE ALARM VERIFICATION 50
SUPERVISE INT SNDR 50
SUPERVISE EXT SNDR 50
ENABLE EMERGENCY KEYS 50
DURESS CODE 51
TIME DISPLAY 51
DATE DISPLAY 51
AC POWER FREQUENCY 51
DEAD LINE DETECT 51
OFF HOOK DETECT 51
PICKUP AFTER HANGUP 51
CLOCK ADJUSTMENT 52
RESET SYSTEM EEPROM 52
RESET SYSTEM RAM 52
ETHERNET MAC ADDRESS 52
SETUP EXPANSION 53
MODULE 1 TYPE 53
MODULE 2 TYPE - MODULE 4 TYPE 53
SERIAL 1 RATE 54
SERIAL 1 FUNCTION 54
SERIAL 2 - SERIAL 5 RATE 55
SERIAL 2 - SERIAL 5 FUNCTION 55
SERIAL 6 RATE 55
SETUP ZONE OPTIONS 56
SWINGER SHUTDOWN NUMBER 56
CROSS ZONE WINDOW 56
ENTRY/EXIT FOLLOWER 56
ZONE 1 OPTIONS – ZONE 176 OPTIONS 56

***OMNI* PRO II SPECIFICATIONS 57**

24-HOUR STANDBY BATTERY CAPACITY 59

SMOKE DETECTOR INSTALLATION GUIDELINES 60

APPENDIX A – CONTACT ID REPORTING FORMAT 61

APPENDIX B - INFORMATION FOR CENTRAL STATION 62

APPENDIX C - ZONE AND UNIT MAPPING 63

APPENDIX D – *LEVITON* ACCESS CONTROL 64

WEB VERSION

FIGURES

FIGURE 1 - CONTROLLER HOOKUP 3
FIGURE 2 - OVERALL CONNECTIONS DIAGRAM 5
FIGURE 3 - TWO-WIRE FIRE ZONE CONNECTIONS 7
FIGURE 4 - FOUR-WIRE FIRE ZONE CONNECTIONS 8
FIGURE 5 - RJ31X JACK CONNECTIONS 10
FIGURE 6 – DSL SPLITTER CONNECTIONS 11
FIGURE 7 - CONSOLE CONNECTIONS 13
FIGURE 8 - SOUNDER CONNECTIONS 15
FIGURE 9 - RESETTING CONTROLLER OUTPUTS 16
FIGURE 10 - REMOTE KEYSWITCH CONNECTIONS 18
FIGURE 11 - *Leviton* THERMOSTAT CONNECTIONS 19
FIGURE 12 - TEMPERATURE / HUMIDITY SENSOR CONNECTIONS 21
FIGURE 13 - PESM CONNECTIONS 22
FIGURE 14 - RS-232 CONNECTIONS 23
FIGURE 15 - RS-485 CONNECTIONS 24
FIGURE 16 - LOCAL NETWORK 26
FIGURE 17 - LOCAL / WIDE AREA NETWORK 27
FIGURE 18 - 24-HOUR STANDBY CONNECTIONS 59

WEB VERSION

WARNINGS AND CAUTIONS

- **WARNING: TO AVOID DEATH OR SERIOUS PERSONAL INJURY** never push objects of any kind into this product through openings, as they may touch dangerous voltages.
- **WARNING: TO AVOID DEATH OR SERIOUS PERSONAL INJUR**Y never touch uninsulated wires or terminals unless the wiring has been disconnected at the network interface.
- Read and understand all instructions. Follow all warnings and instructions marked on the product.
- **Do not use this product near water** - e.g., near a tub, wash basin, kitchen sink or laundry tub, in a wet basement, or near a swimming pool.
- Never install communications wiring or components during a lightning storm.
- Never install communications components in wet locations unless the components are designed specifically for use in wet locations.
- Use caution when installing or modifying communications wiring or components.
- SAVE THESE INSTRUCTIONS.

INTRODUCTION

This installation guide is intended as an aid to installing the *Omni* Pro II-EU security and automation system. The installer should also have thoroughly reviewed and understood the *Omni* Pro II Owner's Manual (20R00-29), which has important information regarding final setup of the system. This manual assumes that the installer has a basic understanding of installing a security system.

This guide applies to the OP202-900 versions of the *Omni* Pro II controller.

This product complies with the requirements of EN 50131-1:2006, EN 50131-3:2009, EN 50131-6, and PD 6662:2010 Standards for Class II, Grade 2 control and indicating equipment.

PLANNING

Before you start, your system should be planned as follows:

1. Zones:

    - Decide where each contact or detector will be located
    - Decide which zone it will occupy
    - Decide zone type for each zone
    - Decide which area it will occupy
    - With the customer, decide what text and voice descriptors will be used. Consult table of voice descriptors, so that you can choose similar words for the text to avoid customer confusion.
    - See SMOKE DETECTOR INSTALLATION GUIDELINES to plan locations for smoke detectors

2. Consoles:

    - Consult the customer on the console location. The console should be easily accessible.

3. Interior Sounder and Outside Siren:

    - Locate both where they cannot be easily tampered with.

4. Lighting and Appliance Switches and Modules.

5. Plan for thermostats, energy saver modules, or other options.

6. Give consideration to where the controller will go. Remember that it needs a duplex receptacle not controlled by a switch, preferably on its own circuit, within 5 feet of the controller.

WEB VERSION

INSTALLATION

Go over your plan with your customer.

1. Install the entire system. Refer to sections in this manual to see how to install various components.

2. Follow the Power-Up and Checkout procedures.

3. Explain the basics to the customer. Deliver all manuals and documentation.

4. Follow up with your customer to keep them satisfied.

CONTROLLER HOOKUP

1. Mount the controller enclosure securely in or on the wall of the building. When choosing a place to mount the controller, consider the following:

   a. An outlet, preferably on its own circuit, is required to be within 5 feet of the controller for the power transformer.

   b. The controller should be protected from weather, temperature extremes, and burglars.

   c. Wire enclosure tamper switches to a zone that is configured to "Tamper" using a 1000-ohm end-of-line resistor.

2. **GROUND THE CONTROLLER "EARTH GND" TERMINAL TO A COLD WATER PIPE OR TO A 4-FOOT GROUND ROD TO PRESERVE ITS BUILT-IN TRANSIENT PROTECTION. USE 14 GAUGE WIRE. TRANSIENT PROTECTION WILL NOT WORK IF THE CONTROLLER IS NOT PROPERLY GROUNDED**.

3. Connect the 24 VAC power transformer to the 24 VAC INPUT terminals.

4. Connect the BLACK battery wire to the minus (-) terminal on the battery. DO NOT connect the red wire at this time. DO NOT reverse the connections; the battery fuse will open. Note:

   a. The unit will NOT start on the battery alone.

   b. An additional battery may be used to achieve the required battery backup time. Refer to **FIGURE 18 (24-HOUR STANDBY CONNECTIONS)** for additional information.

5. Mount the cable tie mounts and bundle cables as shown. Route cables and use tie mounts to minimize strain on cables and terminals and damage to the insulation on the cable.

6. Refer to **FIGURE 1 (CONTROLLER HOOKUP)** for this configuration.

WEB VERSION

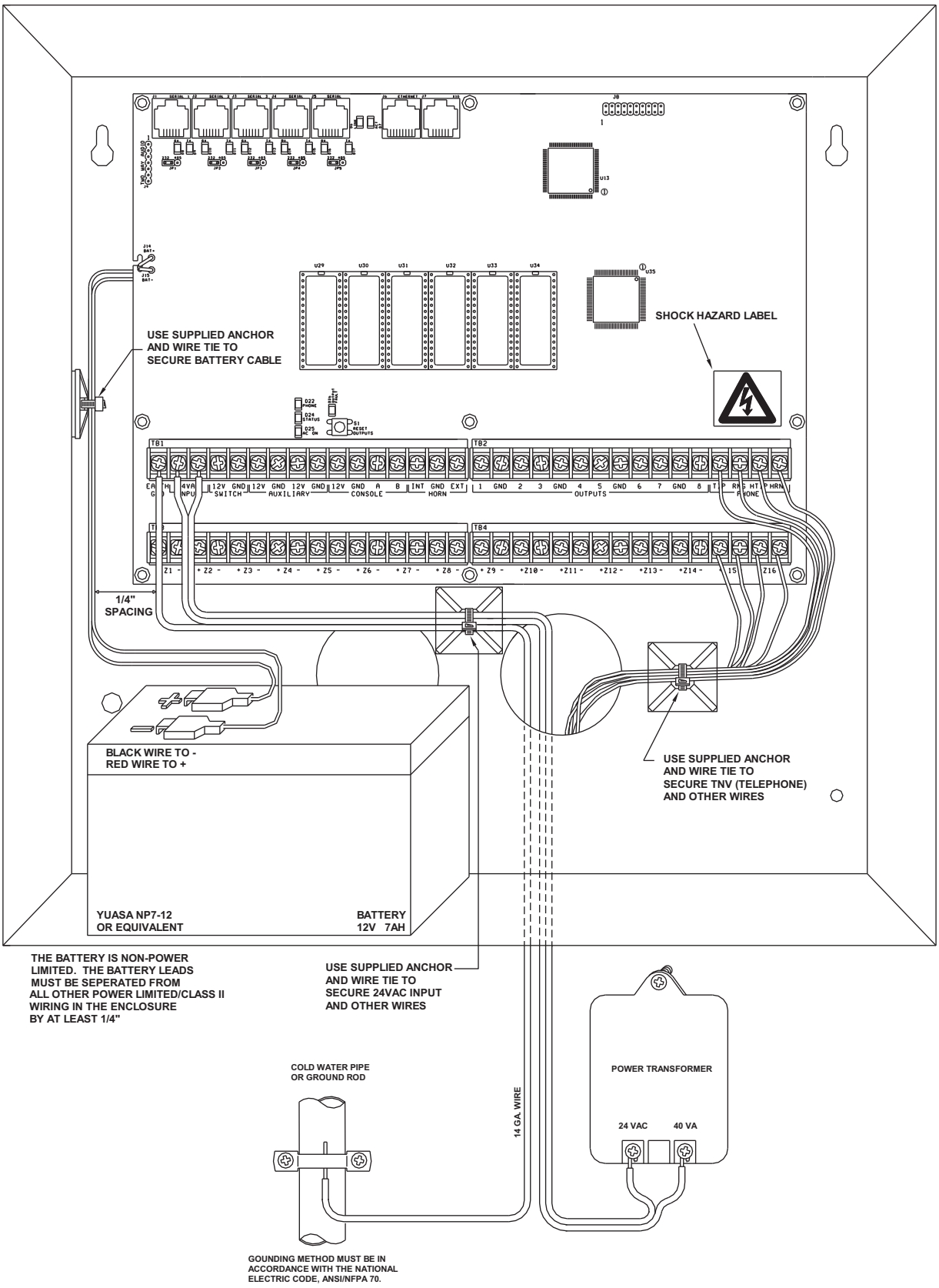

FIGURE 1 - CONTROLLER HOOKUP

WEB VERSION

ABOUT SECURITY ZONES

Each of the 176 security zone inputs on an *Omni* Pro II system may be configured as a burglary zone, a fire zone, a temperature zone, or an auxiliary input. Zones 1-4, however, are the only inputs that can be used with 2-wire smoke detectors. Zones 9-16 (on the controller) and Zones 49-176 (on expansion enclosures) are the only inputs that can be configured as a PESM.

An external 1000-ohm end-of-line zone resistor is required for all zones. The zone type for each zone is selected through the INSTALLER SETUP menu or by using the PC ACCESS software.

The system supports a maximum zone resistance, excluding the end-of-line resistor, of 150 ohms. The default settings for all zone inputs on an *Omni* Pro II controller are configured as Auxiliary inputs.

Omni Pro II can be expanded to 176 zones by adding two 16 Zone Hardwire Expander Modules and up to eight 16 Zone Expansion Enclosures. 16 Zone Expansion Enclosures communicate with the controller on a data bus connection. 16 Zone Expansion Enclosures communicate with detectors on a direct wire connection. If an interconnection fault occurs with a 16 Zone Expansion Enclosure, the 16 Zone Expansion Enclosure and all detectors connected to it will be put into a Tamper condition and a logged into the event log.

BURGLAR ZONE HOOKUPS

The *Omni* Pro II system supports both normally open and normally closed switches. Most contacts designed for doors, windows, motion detectors, glassbreak detectors and other security devices meet this requirement. An external 1000-ohm end-of-line resistor must be used for all burglary zones.

1. When using a normally open switch, a 1000-ohm end-of-line resistor must be in parallel with the zone being used. When using a normally closed switch, a 1000-ohm end-of-line resistor must be put in series with the zone being used.

2. Maximum loop resistance excluding end-of-line resistor and tamper resistor (if used) should not exceed 150 ohms.

   Note: The 1000-ohm end-of-line resistor is required on all zone inputs on Expansion Enclosures.

3. Power motion detectors from AUXILIARY 12V.

4. Unused zones may be left open, and should be left at the default setting of AUXILIARY zone types.

5. When Zones 1-4 are configured to anything other than a Supervised Fire or Gas zone, the corresponding Zone Jumpers (JP11-JP14) must be in the NRM (normal) position.

6. To monitor for sensor tamper on the same zone wiring as the zone alarm switch, a 2.7K-ohm tamper resistor can be used as follows: (Note: in this configuration, the tamper switch must be a normally closed switch)

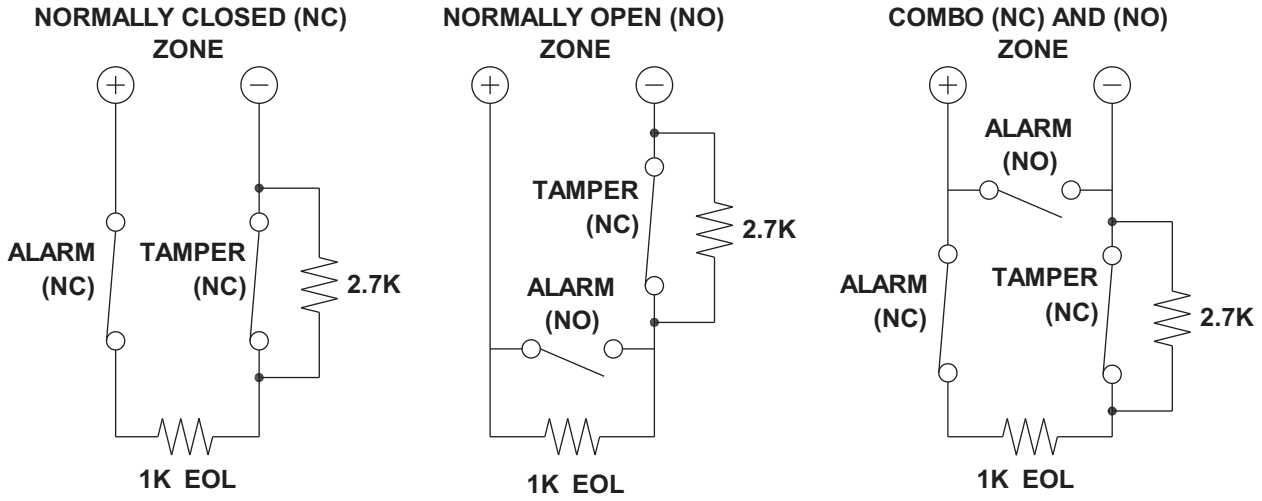

7. See **FIGURE 2 (OVERALL CONNECTIONS DIAGRAM)** for additional configurations of burglary zones.

WEB VERSION

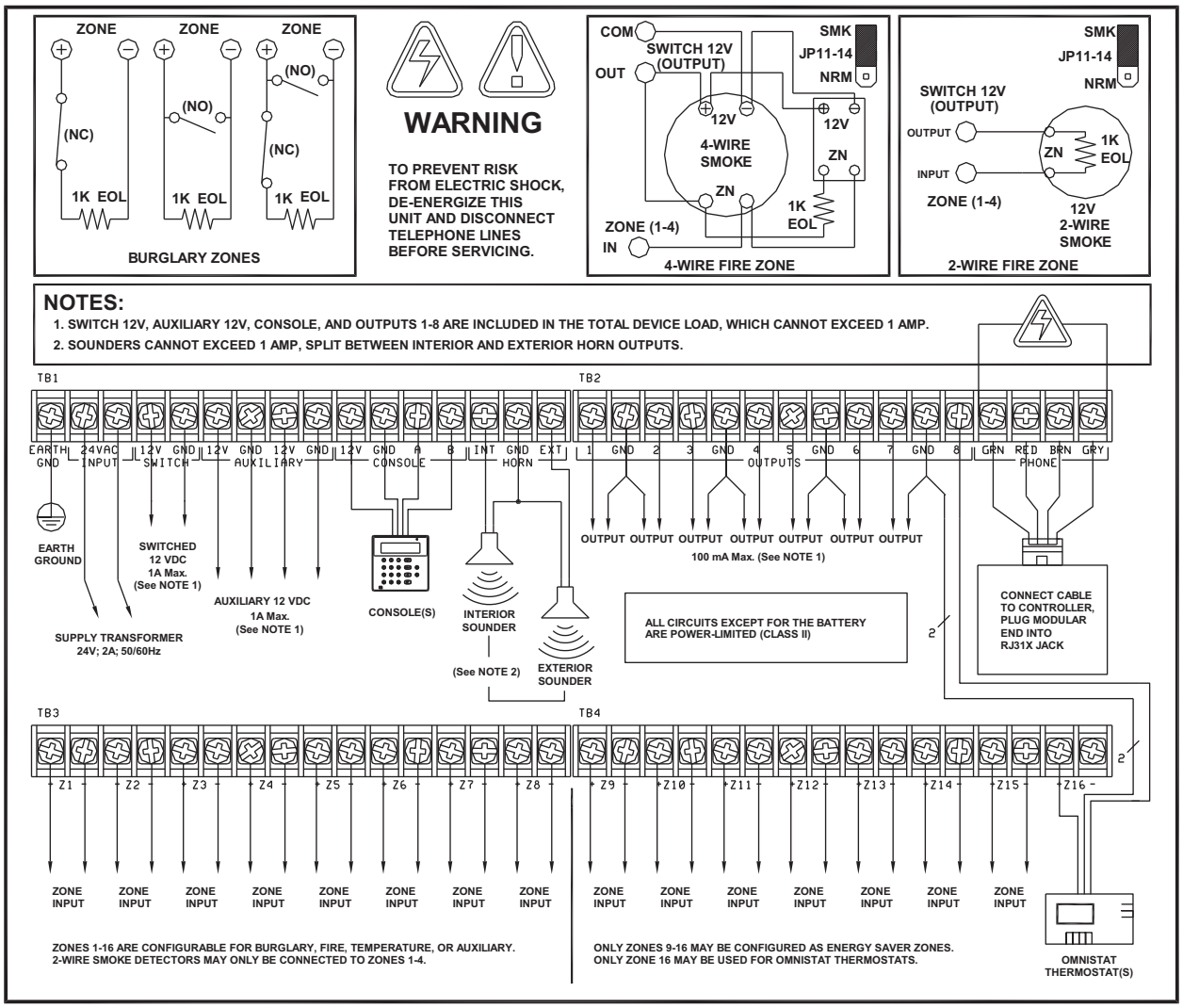

FIGURE 2 - OVERALL CONNECTIONS DIAGRAM

ABOUT FIRE ZONES

The *Omni* Pro II system supports normally open (closed for alarm), two-wire or four-wire smoke detectors. Two-wire smoke detectors can only be connected to Zones 1-4. Four-wire smoke detectors can be connected to any zone. An external 1000-ohm end-of-line resistor must be used for all fire (and gas) zones. When Zones 1-4 are configured as a Supervised Fire (two-wire or four-wire) or Gas zone, the corresponding Zone Jumpers (JP11-JP14) must be in the "SMK" (smoke) position. Zone Jumper "JP11" corresponds to Zone 1, "JP12" corresponds to Zone 2, "JP13" corresponds to Zone 3, and "JP14" corresponds to Zone 4.

1. Smoke detectors must be powered from SWITCH 12V or an Output configured as a SWITCHED POWER OUTPUT.

2. End of line resistor: 1000 ohms. Maximum loop resistance EXCLUDING end of line resistor is a 150 ohms.

3. Smoke detectors are reset when the security system is armed.

WEB VERSION

TWO-WIRE SMOKE DETECTORS

Omni Pro II supports two-wire smoke detectors connected to Zones 1-4.

1. Use normally open (closed for alarm) two-wire "SYSTEM" type smoke detectors (**See -** 2-Wire Smoke Detector Compatibility Chart).

2. Smoke detectors must be connected to Zones 1-4 and configured as a Supervised Fire Zone.

3. An external 1000-ohm end-of-line resistor must be used.

4. Connect to the SWITCH 12V or an Output configured as a SWITCHED POWER OUTPUT.

5. The corresponding Zone Jumpers (JP11-JP14) must be in the SMK (smoke) position.

4. Refer to **FIGURE 3 (TWO-WIRE FIRE ZONE CONNECTIONS)** for this configuration.

Smoke detector compatibility identifier: A

Detector Models	Detector Manufacturer	Maximum Detectors/Zone
2W-B 2WT-B	System Sensor, Unincorporated Div. of Honeywell International Inc.	10
DS260 DS282 DS282S DS282TH DS282THS DS250 DS250TH	Bosch Security Systems	10
F220-P F220-PTH F220-PTHC DS230 DS230F	Bosch Security Systems	8
429AT 521B (SW 1 "ON") 521BXT (SW 1 "ON") 521NB (6V) 521NBXT (6V)	GE Security Inc.	10

2-Wire Smoke Detector Compatibility Chart

FOUR-WIRE SMOKE DETECTORS

Omni Pro II supports four-wire smoke detectors connected to any zone (1-176).

1. Use normally open (closed for alarm) four-wire "SYSTEM" type smoke detectors (System Sensor 2112/24TR or equivalent), rated 8 - 14 VDC.

2. An End of Line Power Supervision Relay Module (System Sensor A77-716B or equivalent) may be used. Install 1000-ohm end-of-line resistor as shown.

3. Power the smoke detector from SWITCH 12V or an Output configured as a SWITCHED POWER OUTPUT.

4. When connected to Zones 1-4, the appropriate Zone Jumper (JP11-JP14) must be in the SMK (smoke) position.

NOTE: Smoke detectors connected to Zones 1-4 are wired differently from those connected to Zones 5-176.
Refer to **FIGURE 4 (FOUR-WIRE FIRE ZONE CONNECTIONS)** for each configuration.

WEB VERSION

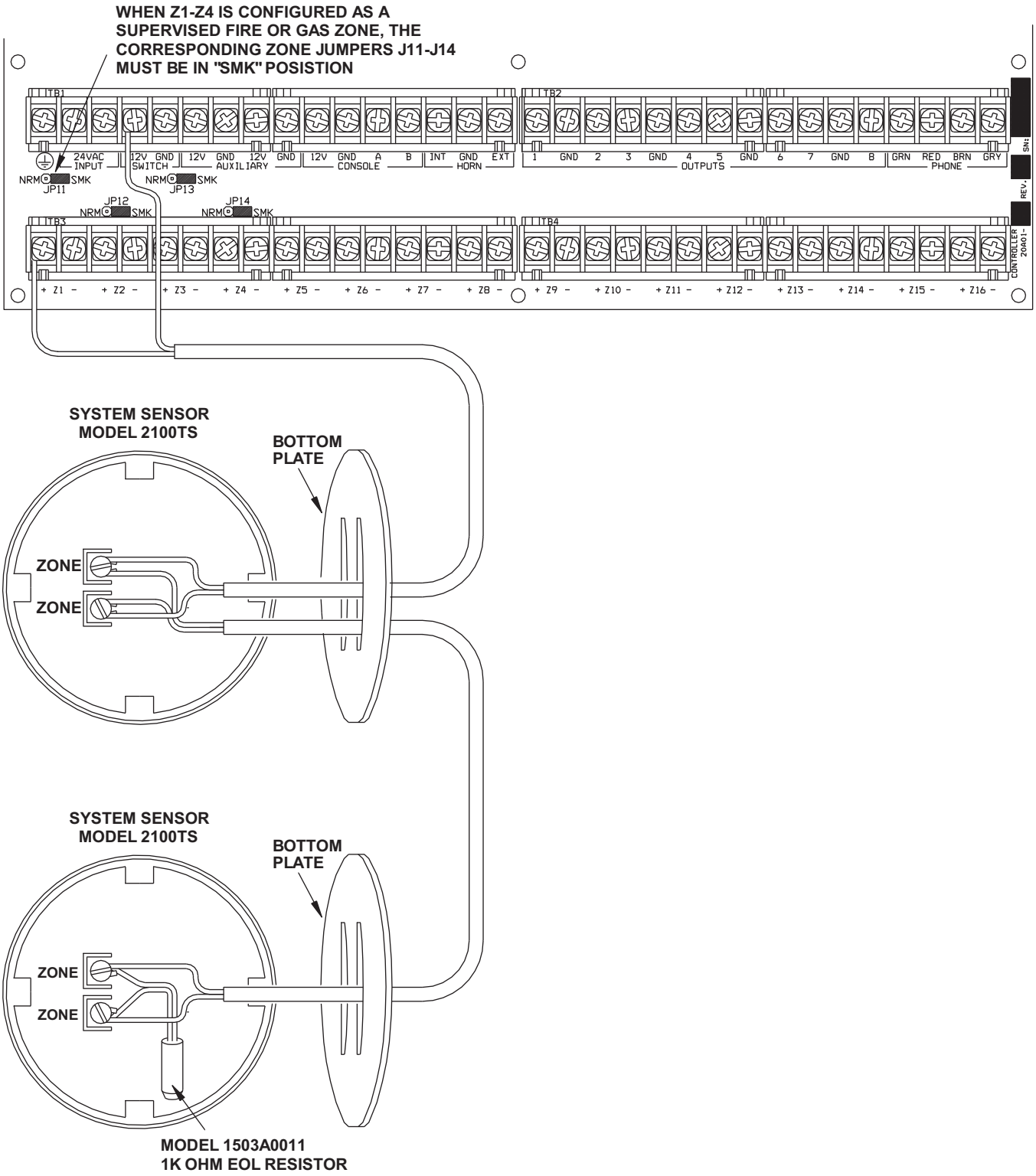

FIGURE 3 - TWO-WIRE FIRE ZONE CONNECTIONS

WEB VERSION

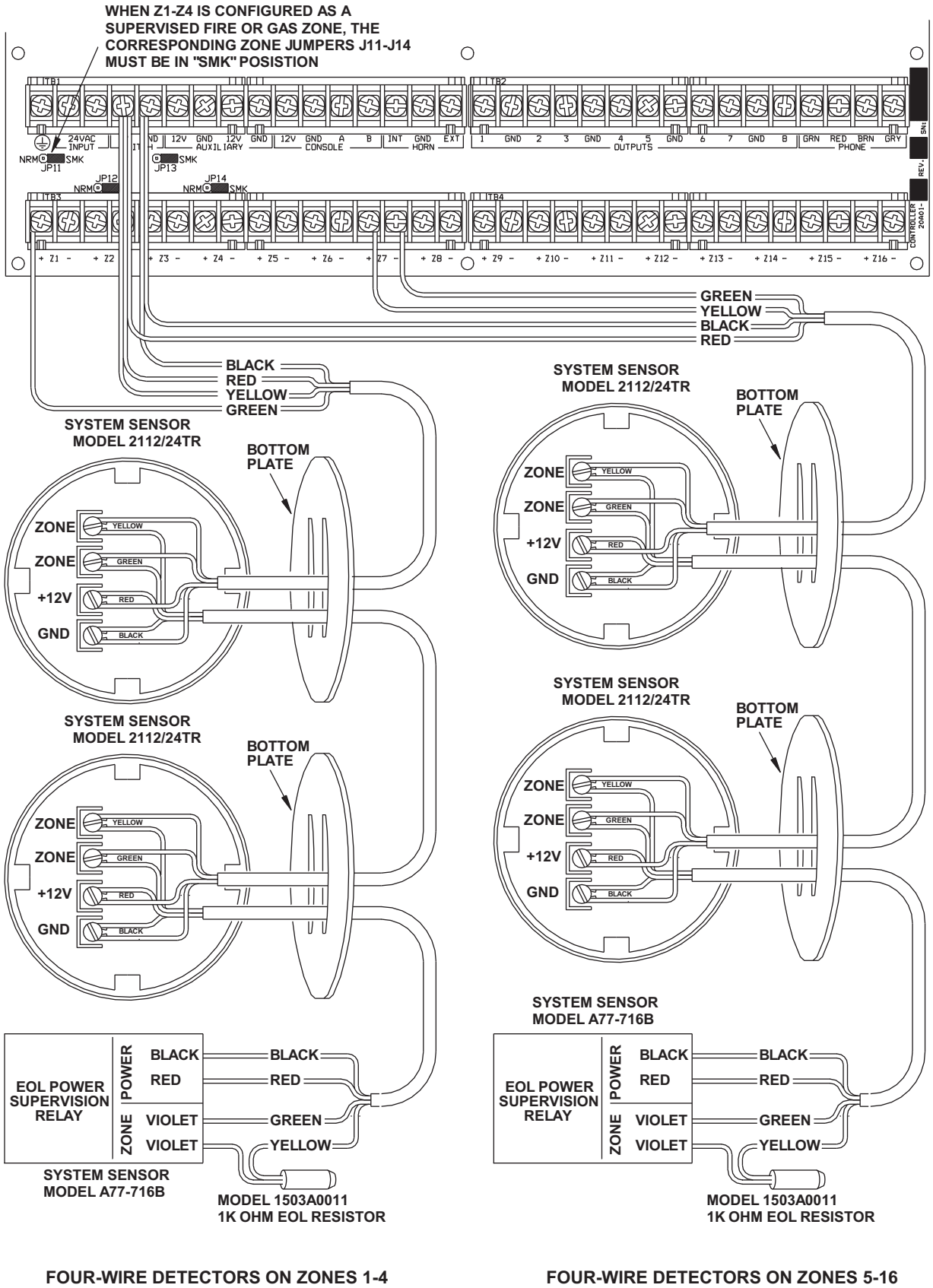

FIGURE 4 - FOUR-WIRE FIRE ZONE CONNECTIONS

WEB VERSION

TELEPHONE CONNECTIONS

1. If an RJ31X jack has been supplied by the telephone company, it is probably wired correctly and the controller can be connected by plugging the supplied 8 conductor telephone cable into the RJ31X jack. The other end of the cable is spaded. The green, red, brown, and gray wires must be connected to the controller at the designated terminals under the section of the board marked 'PHONE'.

2. If required, install the supplied RJ31X jack as shown in the following diagram. The polarity must be correct for proper operation of the phone access feature.

3. IT IS IMPERATIVE THAT THE PHONE LINE COMING INTO THE HOUSE BE CONNECTED TO A GROUNDED SURGE ARRESTOR OUTSIDE THE PREMISES. IT IS THE RESPONSIBILITY OF THE TELEPHONE COMPANY TO PROVIDE THIS SURGE ARRESTOR.

4. INSPECT THE INCOMING PHONE LINES. THE FIRST THING THAT THEY SHOULD GO TO IS A SMALL BOX ON THE OUTSIDE OF THE PREMISES. THERE SHOULD BE A HEAVY GROUND WIRE COMING FROM THIS BOX GOING TO A COLD WATER PIPE OR A SEPARATE GROUNDING ROD.

5. IF THERE IS NO SURGE ARRESTOR OR IF THE GROUND WIRE IS MISSING, HAVE THE CUSTOMER INSIST THAT THE TELEPHONE COMPANY INSTALL ONE FOR THE SAFETY OF THE CUSTOMER.

6. WHEN WIRING A RJ31X JACK, MAKE SURE THAT THE INCOMING PHONE LINES GO TO THE TELEPHONE COMPANY SURGE ARRESTOR BEFORE THEY GO TO THE RJ31X JACK.

7. When the RJ31X is installed as shown, locate the green, red, brown, and gray spaded wires from the 8 conductor phone cable and connect to the section on the *Omni* Pro II controller marked 'PHONE'. Plug the modular end of the cable into the RJ31X jack. If necessary, bend the tab up on the plug to ensure a tight fit that will not fall out.

8. Verify the following if you have trouble during check out: With the system running, the RJ31X jack properly connected and all phones on-hook (hung up), the PHONE LED, located in the upper left corner of the controller, should be OFF. If it is on, reverse the RED and GREEN wires to both the house phones and the telephone company wires at the RJ31X jack. When the receiver is picked up on any phone, the PHONE LED will come on. When the phone line rings, the PHONE LED will light.

9. If the *Omni* Pro II is accessed on an in house telephone, the *Omni* Pro II will disconnect the phones from the phone company lines and supply its own talk voltage to the phones. The PHONE LED will be on in this case.

10. Refer to **FIGURE 5 (RJ31X JACK CONNECTIONS)** for this configuration.

DIGITAL SUBSCRIBER LINE (DSL) CONNECTIONS

When the *Omni* Pro II is connected to a Digital Subscriber Line (DSL), a DSL Splitter must be used to provide separate outputs for filtered voice (phone) and DSL (data). Splitting the voice and data is necessary because:

1. The higher frequencies of the DSL signal must not pass through the *Omni* Pro II controller. It can cause problems with the DTMF detection and the digital dialer.

2. Whenever the *Omni* Pro II is accessed on an in house telephone, the *Omni* Pro II will disconnect the phones from the phone company lines (in this case the DSL line). When that occurs, the DLS connection is temporarily lost.

Refer to **FIGURE 6 (DSL SPLITTER CONNECTIONS)** for this configuration.

WEB VERSION

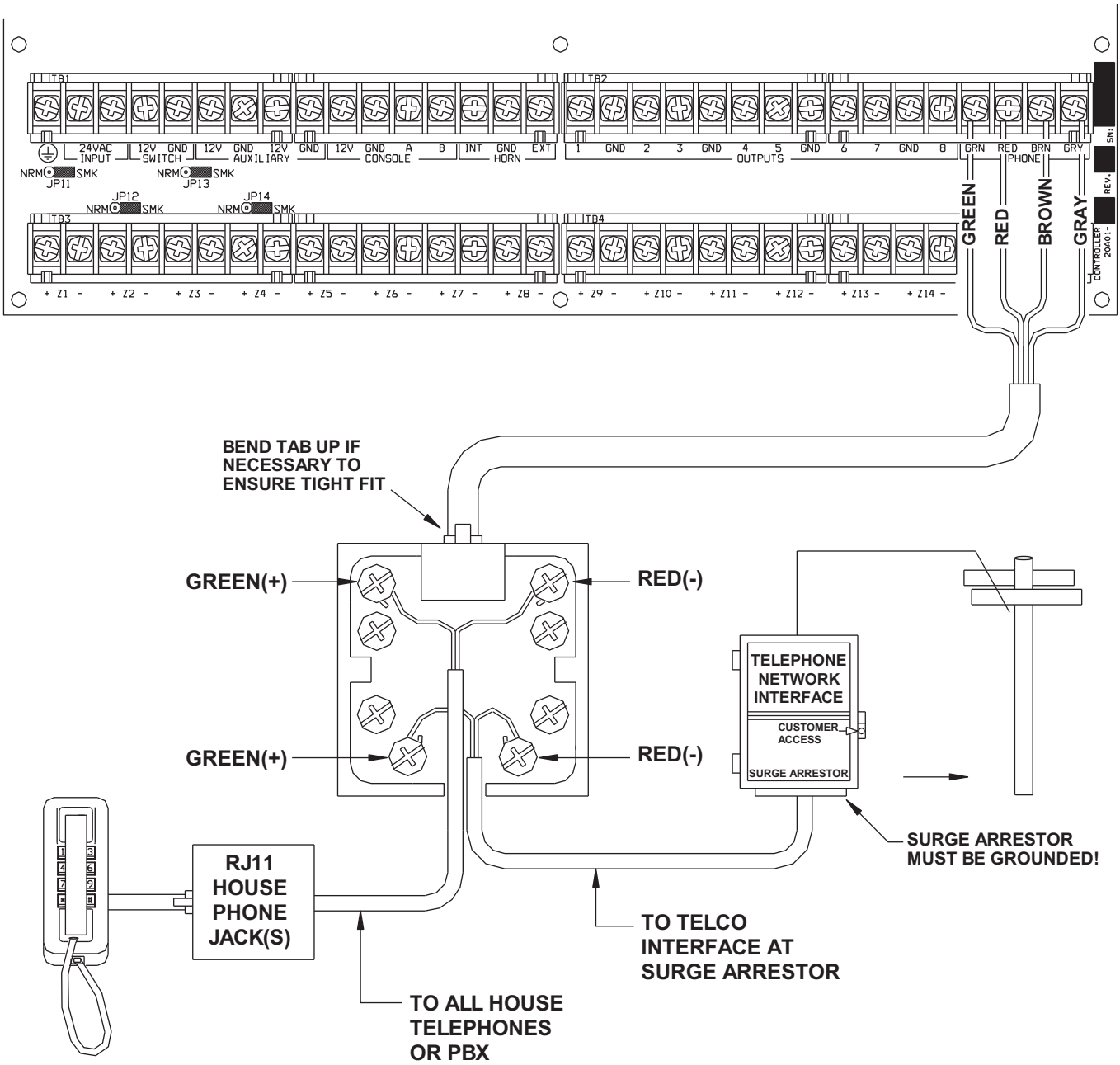

FIGURE 5 - RJ31X JACK CONNECTIONS

WEB VERSION

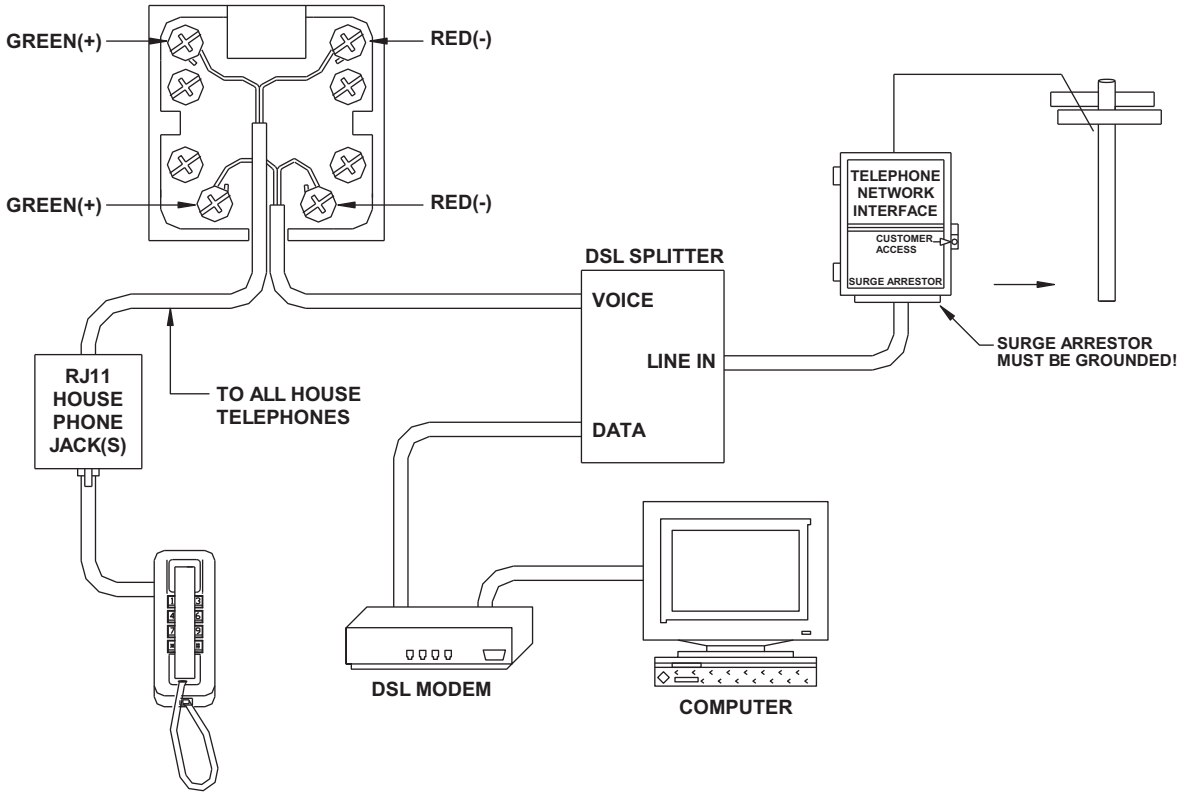

FIGURE 6 – DSL SPLITTER CONNECTIONS

LCD CONSOLE HOOKUP

1. 16 LCD Consoles (Models 33A00-1, 33A00-4, 33A00-23, 33A00-24) MAXIMUM per system, subject to power availability.

2. Use 4-conductor 22-gage wire, 1000 feet maximum length. Consoles can be homerun or daisy chained. This length shall be divided by the total number of consoles at the end of the run. For example, for 8 consoles, the maximum length reduces to 125 feet. All LCD Consoles are connected to the same 4 wires, +12, GND, A, B.

3. The console should be mounted so that the LCD display is at or slightly above eye level. Consoles should be kept out of the reach of young children. A good height is approximately 58 inches from the floor to the bottom of the console enclosure.

4. Console Tamper Kit (P/N: ENTMP-9EU) must be installed and connected to a zone that is configured to “Tamper” using a 1000-ohm end-of-line resistor.

5. Remove console face from back plate (slots on bottom of console will release back plate, use a screwdriver). Mount the back plate to the wall. Mounting holes are designed to fit on a single or double gang box, or directly to the wall. Pull the wires from the wall through the opening in the back plate. Splice the wires to the supplied cable. Connect the cable to the connector on the console board (J1). Snap the console face on to the back plate. Remove protective film from the LCD lens.

6. Refer to **FIGURE 7 (CONSOLE CONNECTIONS)** for this configuration.

WEB VERSION

CONSOLE SETUP

The console has different operating options that can be setup from the console to the user's preference. If more than one console is being used, it is required that you give each console a different address. You can change the address of a console through the console setup mode.

To enter the console setup mode, simultaneously press and hold the 4 and up arrow (⇑) for approximately 1 second. The console will beep 5 times and enter the setup mode. The top line of the display will indicate what you are doing, followed by the current setting. The bottom line will show a menu of your options. To the lower right corner of the display is the direction arrow(s). Where possible, the up (↑), down (↓), and two-headed (↕) arrow characters are shown on the console display to indicate which arrow keys may be pressed at that time. Press the down arrow (⇓) key to advance to the next item. Press the up arrow (⇑) key to go back to the previous item.

CONSOLE ADDRESS

If you are installing more than one console, each console must be set to a different address. The default address setting is (1) - this is adequate if only one console is being used. The choices at the bottom are 1-16. When making your choice, choose an address between 1-16, then press the # (pound) key.

SOUNDER

If you wish not to hear the beeper in the console for any reason, the sounder option can be turned off. Select (0) for OFF or (1) for ON, then press the # key.

KEY CLICK

The sounder makes a click every time a key is pressed. This option may also be turned off. Select (0) for OFF or (1) for ON, then press the # key.

KEY BACKLIGHT

The keys on the console keypad are lit. The keys can be never lit, always lit, or only lit when the LCD display is lit. Select (0) OFF, (1) for ON, or (2) TIMED, then press the # key.

VIEWING ADJUSTMENT

This option is an adjustment for the viewing angle of the LCD display. This has been set to its best value at the factory, however, you may wish to tweak it. The display has 20 levels of adjustment. Select (1) for a lower viewing angle, or (2) for a higher viewing angle.

LANGUAGE

This option is to display the 'console setup' text on the LCD display in English, French, Italian, or Spanish. Select one of the languages, then press the # key.

EXIT SETUP MODE

To exit Setup Mode, press and hold the 4 and up arrow ( ) keys simultaneously for about 1 second. The console will return to normal operation. You may need to press (*) to restore the display.

WEB VERSION

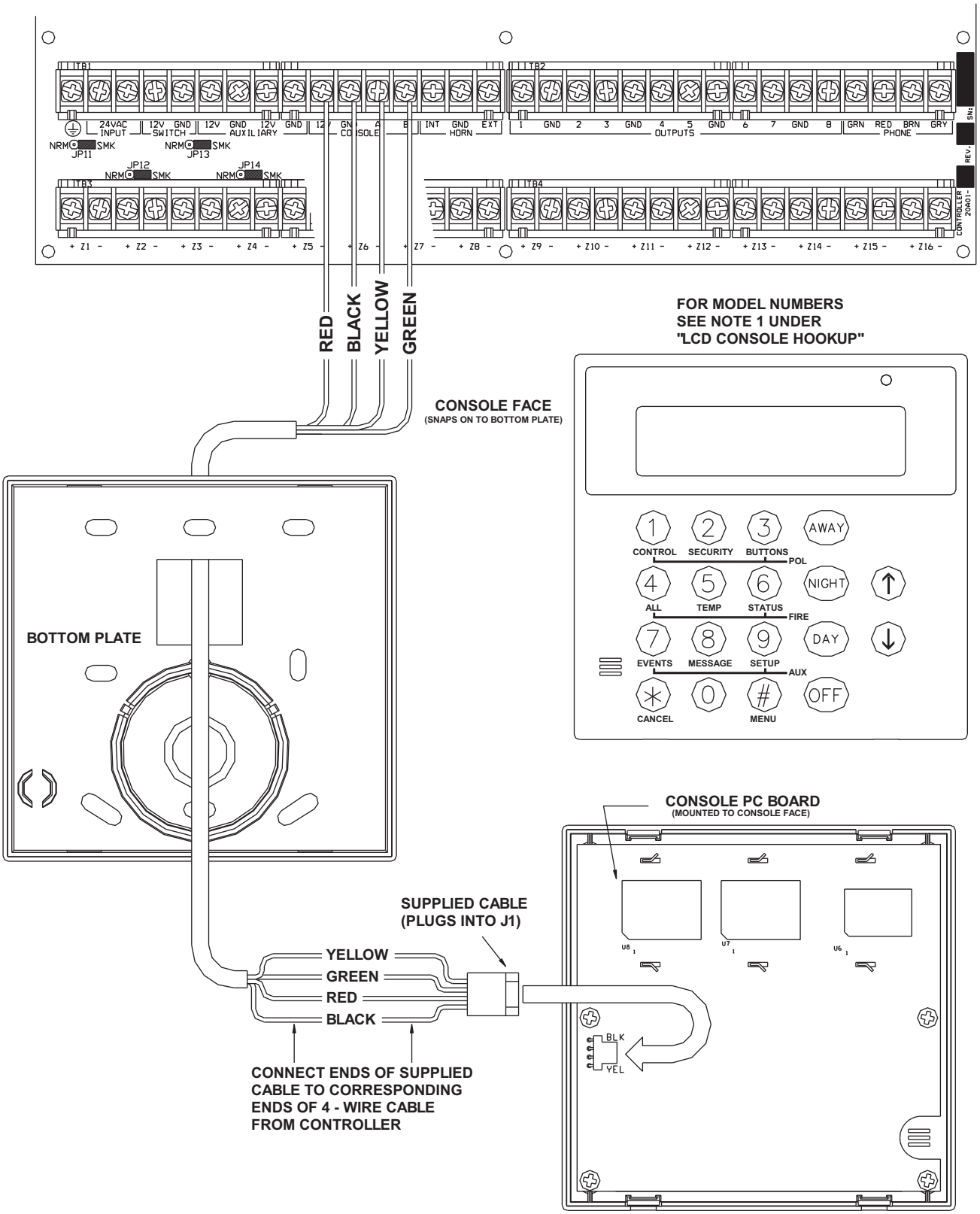

FIGURE 7 - CONSOLE CONNECTIONS

WEB VERSION

SOUNDER OUTPUTS

The Horn Output provides 12VDC to power bells, piezo sirens, self-contained sirens, and siren drivers (do not connect speakers to the Horn Output). Sounders can draw up to 1 amp **MAXIMUM**, split between the Interior and Exterior Horn Outputs. Use a relay connected to an auxiliary power supply if higher current draw is required.

INTERIOR SOUNDER HOOKUP

1. Locate the interior sounder in a central location. The sounder is very loud. Do not install it in a room where small children or animals could be trapped if the alarm is activated.

2. The Interior Horn Output monitors the wiring to bells and sirens. When enabled, it will report trouble and make a digital dial out when an open, short, or other wiring problem is detected in the supervised bell circuit. When violated, the following trouble is displayed on the console, “FIRE TAMPER TRBL NOW”.

3. To enable supervision of the Interior Horn Output, the “SUPERVISE INT SNDR” feature must be set to “ON”.

4. Refer to **FIGURE 8 (SOUNDER CONNECTION)** for connections.

EXTERIOR SOUNDER HOOKUP

1. An exterior sounder is a requirement for EN 50131 installations.

2. Wire tamper switches to a tamper zone with a 1000-ohm end-of-line resistor.

3. The Exterior Horn Output monitors the wiring to bells and sirens. When enabled, it will report trouble and make a digital dial out when an open, short, or other wiring problem is detected in the supervised bell circuit. When violated, the following trouble is displayed on the console, “FIRE TAMPER TRBL NOW”.

4. To enable supervision of the Exterior Horn Output, the “SUPERVISE EXT SNDR” feature must be set to “ON”.

5. Refer to **FIGURE 8 (SOUNDER CONNECTION)** for connections.

WEB VERSION

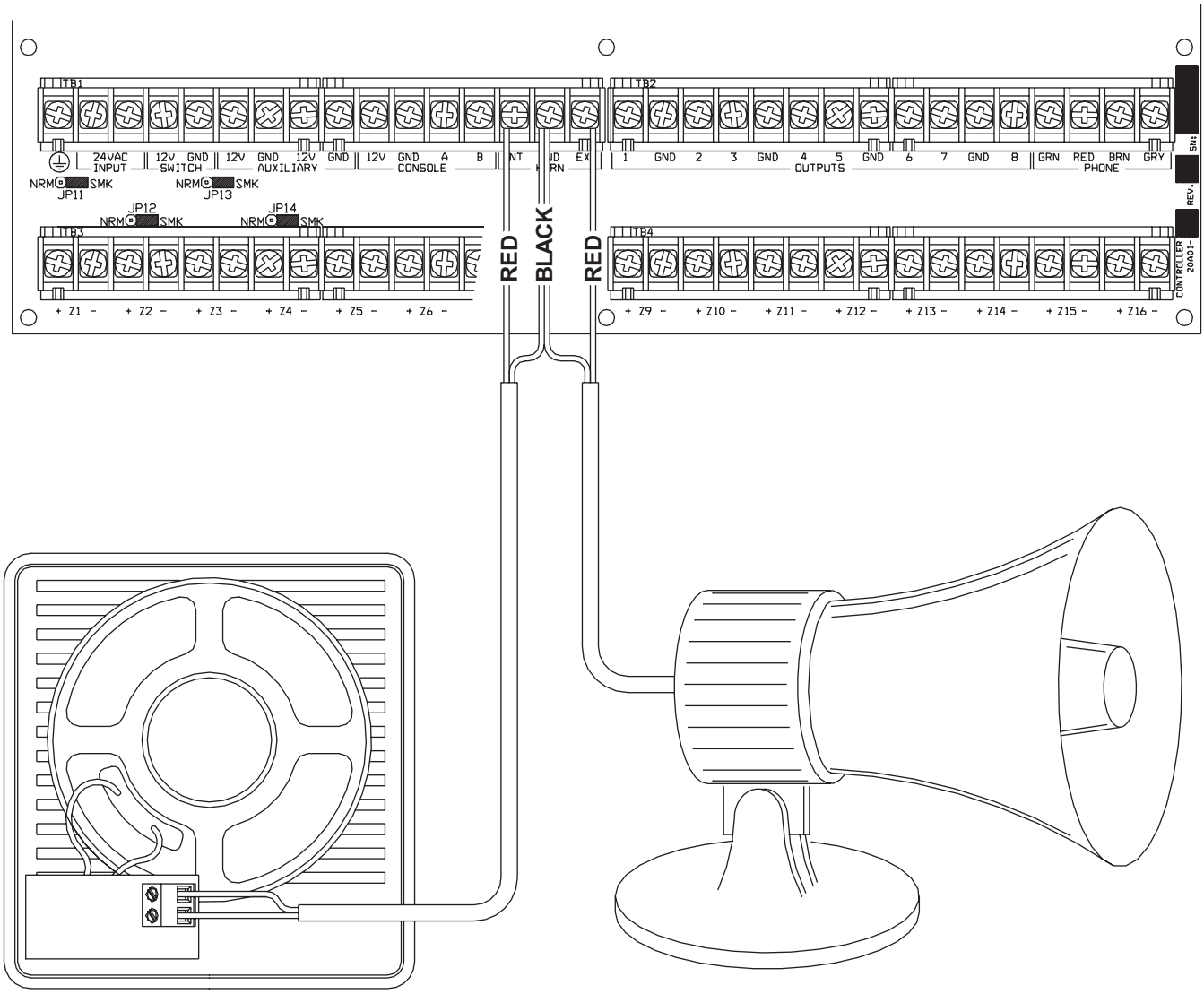

FIGURE 8 - SOUNDER CONNECTIONS

WEB VERSION

CONTROLLER OUTPUTS

The *Omni* Pro II provides 8 programmable hardwired voltage outputs and two horn voltage outputs. These outputs are programmable for the following output types:

- General Purpose low voltage switching applications (12 VDC) - Units 385 - 392
- Sounder triggering (a trigger for siren and voice drivers for BURG and FIRE)
- Communicator outputs (radio, cellular, or any other type of auxiliary communicator)
- 'ARMED' and 'OK TO ARM' outputs
- Switched Output (to power smoke detectors and cycle power to latching devices)

Outputs 1 - 8 can supply a **maximum** of 100 mA each. These outputs are included in the total DEVICES load, which cannot exceed 1A. If the Interior or Exterior Sounder is configured to an Output Type, the HORN outputs can supply a **maximum** of 1A. HORN outputs are included in the total HORNS load, which can not exceed 1A.

RESET OUTPUTS

Outputs 1-8 are protected from an overload condition. If an overload condition occurs on an output, it will shut off (the output will supply 0V). When this occurs, the "Output Fault" (D26) LED (marked "A" if Figure 9) will illuminate. To reset the output, remove the device causing the overload condition, then press the "Reset Outputs" (S1) Switch (marked "B" if Figure 9).

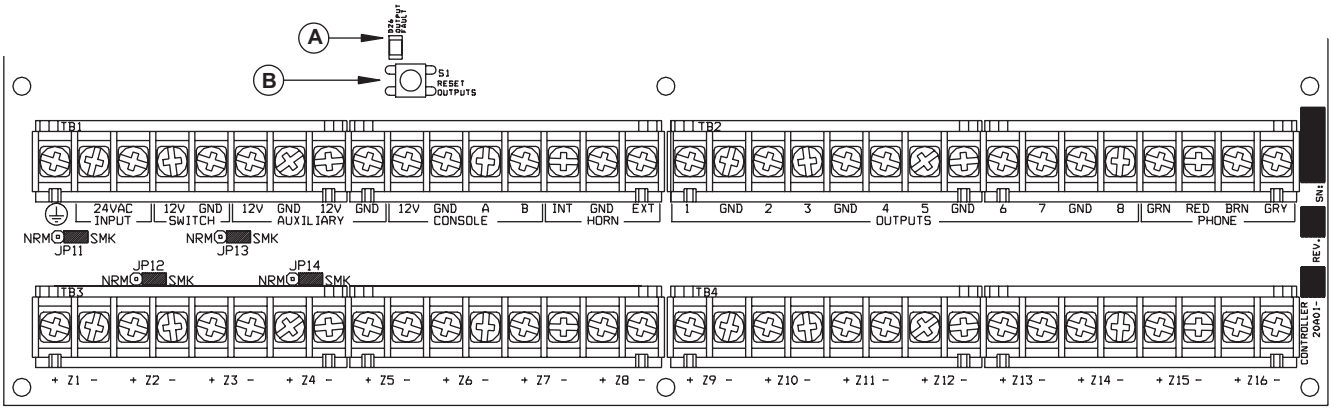

FIGURE 9 - RESETTING CONTROLLER OUTPUTS

OUTPUT APPLICATIONS

GENERAL PURPOSE SWITCHING APPLICATIONS

This output will supply 12 VDC to the output terminal when its corresponding unit is ON. Output 1 is designated Unit 385 through Output 8 which is Unit 392. This can be used to drive relays for many different applications, including switching sprinkler valves and low-voltage lighting.

SOUNDER TRIGGERING

This output can be used as a trigger for siren and voice drivers. When a driver requires a separate input for burglary and fire, you can configure this output to give a voltage trigger to the driver. Also, each area can have its own sounder.

WEB VERSION

COMMUNICATOR OUTPUTS

This output can be used for radio communications or any other type of auxiliary communications to augment the built-in digital and voice dialers. Any communications device can be used with the *Omni* Pro II, provided that it is powered by 12 VDC, has 12 VDC triggered inputs, and has 2 (or more) channels.

The 'Communicator' outputs are activated 3 seconds before the *Omni* Pro II dialer begins to dial either using its built-in digital dialer or voice dialer.

The following events will activate the BURG output: Burglar alarms (including panic zones), Auxiliary emergencies, Police emergencies, and Duress alarms. Fire alarms and the fire emergencies will activate the FIRE output.

Note: The Interior and Exterior Fire Sounder generates 12VDC in a 3 pulse temporal pattern.

"ARMED" AND "OK TO ARM"

ARMED: When the system is armed in any of the security modes (AWAY, NIGHT, DAY, or VACATION), this output is active. It is typically used to activate a red LED to indicate that the system is 'armed'.

OK TO ARM: When all security zones are secure, no zones are bypassed, and the system is in the 'OFF' mode, this output is active. It is typically used to activate a green LED to indicate that the system is 'ok to arm'.

SWITCHED OUTPUT

This output is used to cycle power to latching devices when the system is armed. This output will reset the smoke detectors when the system is armed after an alarm.

***LEVITON* COMMUNICATING THERMOSTATS**

When *Leviton* RC-Series thermostats are used, Output 8 is used to communicate with up to 64 thermostats. There is no need to configure this output when used with *Leviton* thermostats. It may be left at the default setting of "General Purpose".

REMOTE ARM/DISARM SWITCH

1. If desired, a remote keyswitch, keypad, or hidden arm/disarm toggle switch can be connected to the system. The device should have a momentary close type switch.

2. Configure one of the zone inputs as a KEYSWITCH INPUT zone. A closure of the switch contacts will toggle the arming mode between OFF and AWAY (Entry and Exit delays are still active).

3. Configure one of the outputs as an "ARMED" and another output as an "OK TO ARM" output. These outputs are used to activate a red or a green LED based on the state of the alarm system. The "ARMED" and "OK TO ARM" outputs can supply a **maximum** of 100 mA each. These outputs are included in the total DEVICES load, which cannot exceed 1 A.

4. Refer to **FIGURE 10 (REMOTE KEYSWITCH CONNECTION)** for this configuration.

WEB VERSION

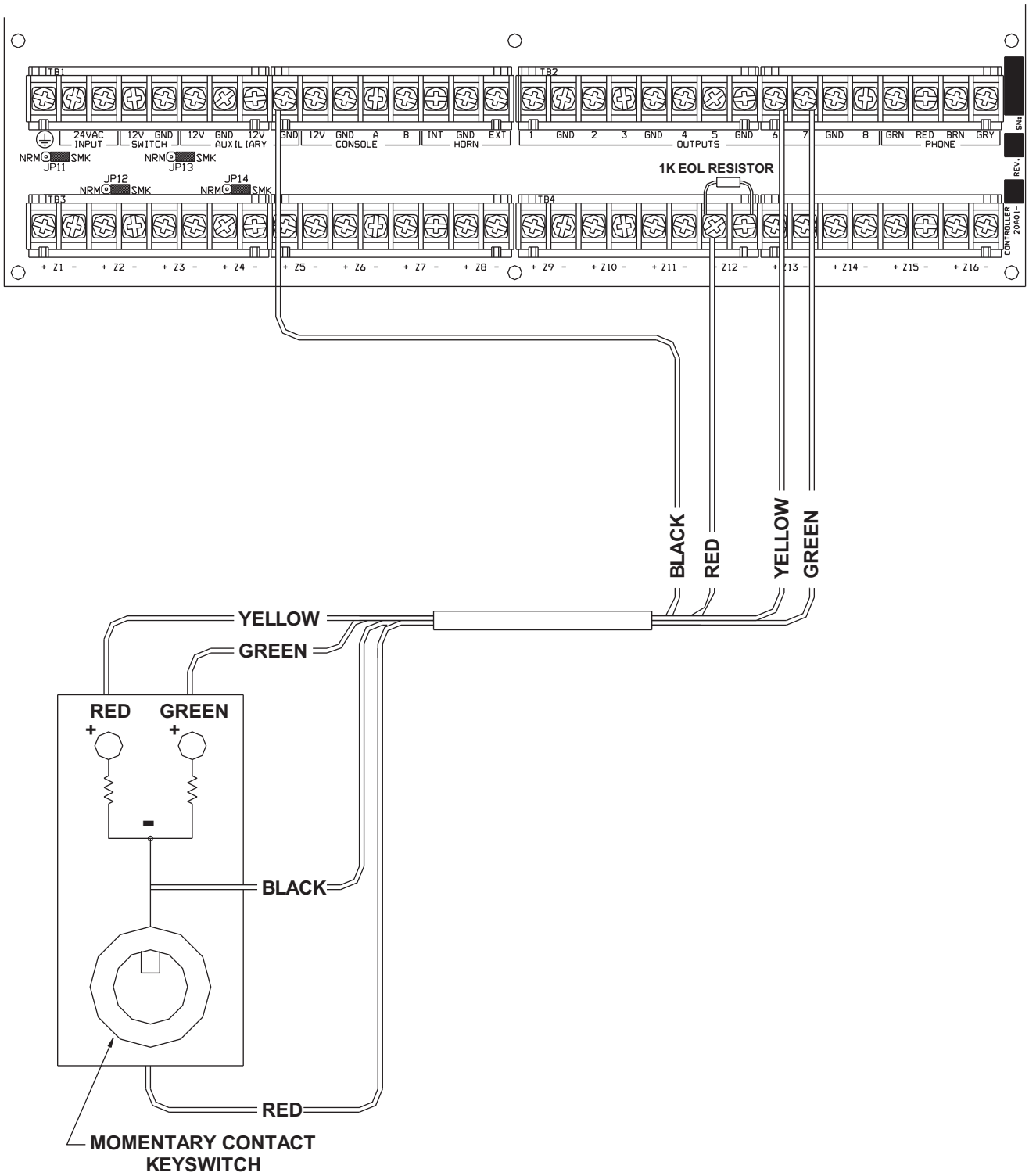

FIGURE 10 - REMOTE KEYSWITCH CONNECTIONS

WEB VERSION

LEVITON THERMOSTATS

Omni Pro II supports up to 64 Omnistat Communicating Thermostats. The controller can send commands to the thermostat to change mode, cool setting, heat setting, status of fan and hold, and other items.

Run a 3 (or 4) conductor wire from *Omni* Pro II to the thermostat location. All thermostats are connected in parallel to Ground, Zone +16, and Output 8. Make the connections (as shown in Figure 11).

Notes:

1. Thermostats may be connected in home-run or daisy chain configuration.

2. The communications jumper (J8) labeled “COMM JUMPER” on the thermostat circuit board must be in place.

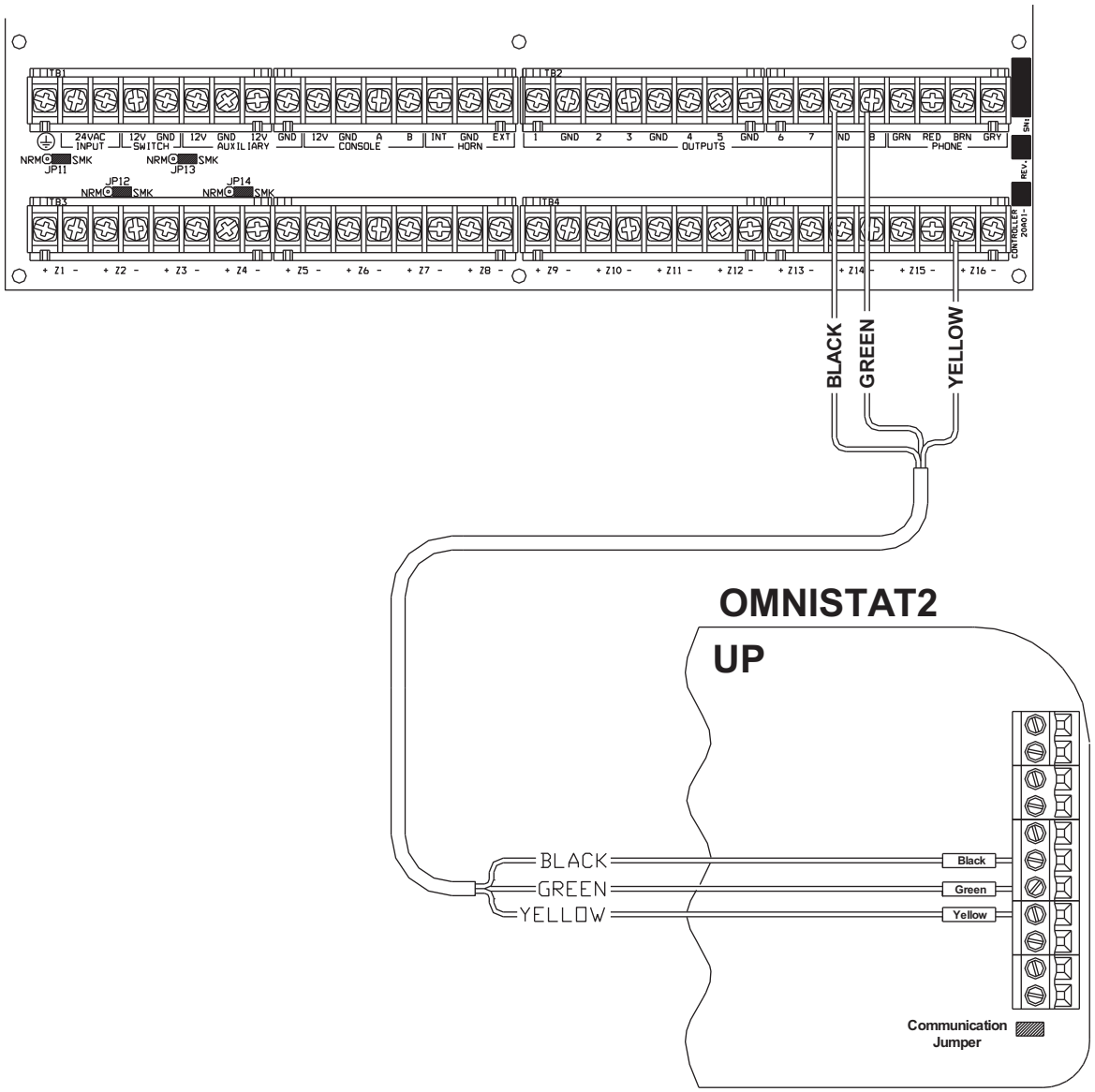

FIGURE 11 - *LEVITON* THERMOSTAT CONNECTIONS

WEB VERSION

PROGRAMMABLE ENERGY SAVER MODULES

Programmable Energy Saver Modules may be connected to:

Controller:	**Zone 9 and Output 1**	**through**	**Zone 16 and Output 8, respectively**
Expansion Enclosures:	**Zone 1 and Output 1**	**through**	**Zone 16 and Output 16, respectively**

1. *Omni* Pro II can support up to 136 Programmable Energy Saver Modules (PESM). Each PESM requires one security zone input and one controller output. The zone input corresponds to the controller output (Zone 9 and Output 1 through Zone 16 and Output 8, respectively). If Zone 9 is used, Output 1 must be used as its pair.

2. When setup as an Energy Saver Zone Type (Type 80), the zone and unit (output) is used as a pair to read in temperature and control the setback temperature of the house. Only zones 9-16 and 49-176 may be configured as an Energy Saver zone.

3. Run a 4-conductor wire from the *Omni* Pro II controller to each PESM. Connect as shown in **FIGURE 13 (PESM CONNECTIONS)**.

4. The PESM should be mounted on an interior wall, preferably close to the HVAC thermostat. Run a 2-conductor wire from the PESM to the thermostat. Connect the PESM between the RED wire going to the thermostat and the RED terminal on the thermostat.

5. Program the zone type for PESMs as a Type 80, Energy Saver. It may also be programmed as a Temperature (Type 82), or Temperature Alarm (Type 83) for special applications.

NOTES ON HVAC SYSTEMS

1. Description of the PESM

   The PESM is a temperature sensor and control relay in a small enclosure that mounts near a central heating, ventilation, and air conditioning (HVAC) system thermostat. The PESM allows the automation system to read the temperature of the area that the HVAC system controls. The relay in the PESM is used to break the 24V RED wire between the thermostat and the HVAC system. When the automation system is in setback mode and the actual temperature is between the LO and HI setpoints, the relay energizes to break the 24V red wire; hence, the HVAC system will no longer operate.

   In heating season, when the actual temperature falls below the LOW setpoint, the automation system turns the relay in the PESM off, thus restoring power to the thermostat, allowing the thermostat to heat as it normally would under the control of the thermostat. The PESM will cycle the thermostat on and off to maintain the LOW setpoint.

   In cooling season, when the actual temperature rises above the HI setpoint, the automation system turns the relay in the PESM off and the thermostat will cool as it normally would under the control of the thermostat. The PESM will cycle the thermostat on and off to maintain the HI setpoint.

   The Red LED on the PESM will illuminate when the PESM is overriding the thermostat. The Red LED will be off when the thermostat is working normally.

   If the PESM is disconnected from the automation system, the relay will not energize and the HVAC system will operate normally, under the control of the thermostat.

2. Standard Heating and Cooling Systems

   The PESM is compatible with <u>all</u> mechanical thermostats.

3. The PESM is also compatible with electronic thermostats that run totally on battery power.

4. Heat Pumps

   Programmable Energy Saver Modules are compatible with heat pumps, however, the savings gained by setting the heat pump back may be erased by the auxiliary heaters when the heat pump tries to recover from the setback. A PESM will work best with heat pumps that have one or more of the following features:

WEB VERSION

a. An outdoor temperature switch that prevents the auxiliary heat from coming on unless it is very cold outside. This is sometimes called a “heat balance” switch.

b. A thermostat that uses rate of rise to determine if auxiliary heat is necessary: The Enerstat Model DSL-450. When recovering from setback, the thermostat runs the heat pump first. It will run the auxiliary heat only if the rate of temperature rise is less than 6 degrees F. per hour.

c. An alternative auxiliary heat source that is inexpensive (i.e. gas).

These features will avoid the use of auxiliary heat (usually an electric strip heater) which is more expensive than using the heat pump when recovering from setback. In general, heat pumps take a longer time to recover from setback, so it may be advantageous to program a setback only for extended periods, such as a vacation.

TEMPERATURE, OUTDOOR TEMPERATURE, AND HUMIDITY

When connected to the controller, the Model 31A00-1 (31A00-7 Extended Range) Indoor/Outdoor Temperature and Model 31A00-2 (31A00-8 Extended Range) Indoor/Outdoor Temperature and Humidity Sensor is used for sensing indoor temperature and/or reporting the relative humidity from 0 to 100 percent or for sensing the outdoor temperature and/or reporting the outdoor relative humidity. The outdoor temperature can be displayed on the console, spoken over the telephone, or displayed on an *Leviton* Communicating Thermostat.

1. Each Temperature Sensor requires one zone input. Each Humidity Sensor requires one zone input.

   - Program the zone type as an Outdoor Temperature (Type 81), Temperature (Type 82), Temperature Alarm (Type 83), for temperatures between 0°F - 120°F

   - Humidity (Type 84), for humidity between 0% – 100%

   - Extended Range Outdoor Temperature (Type 85), Extended Range Temperature (Type 86), and Extended Range Temperature Alarm (Type 87), for temperatures between -40°F - 120°F

2. When mounting outdoors, plan to mount under an overhang or to the underside of an eave, otherwise known as the soffet, to protect it from direct sunlight and rain. Run a 4-conductor wire from the *Omni* Pro II controller to the selected location.

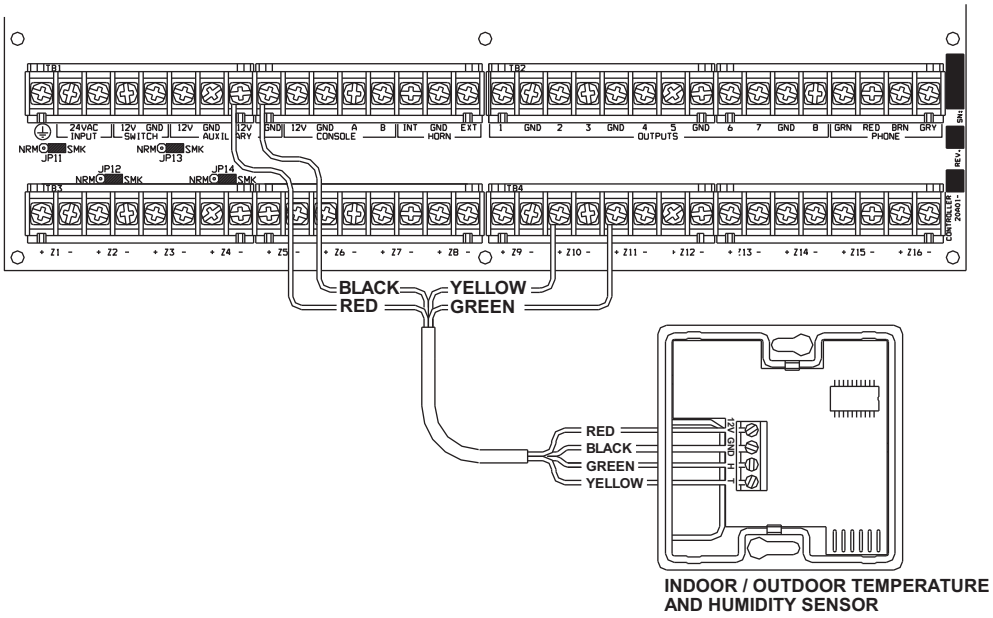

FIGURE 12 - TEMPERATURE / HUMIDITY SENSOR CONNECTIONS

WEB VERSION

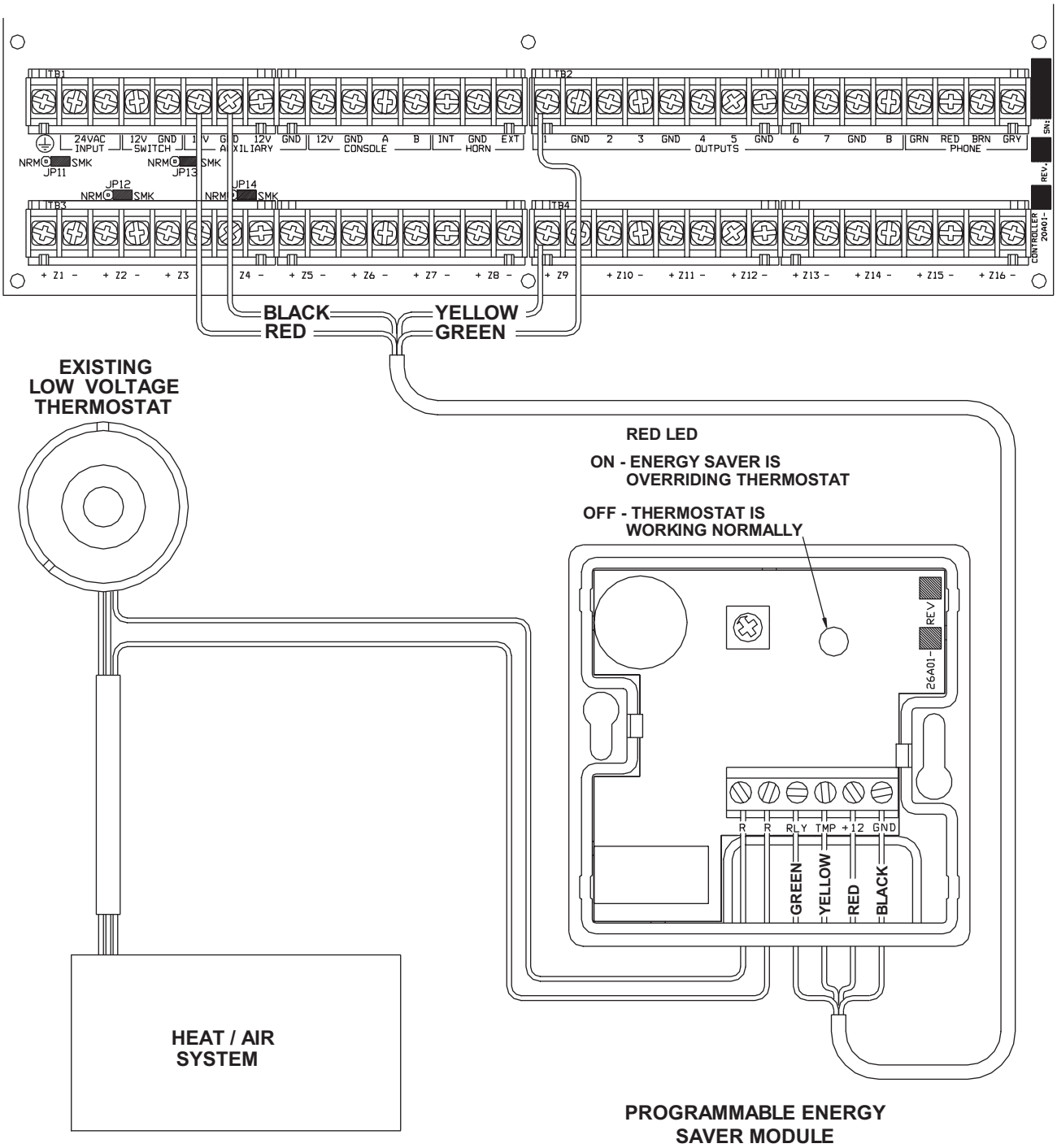

FIGURE 13 - PESM CONNECTIONS

WEB VERSION

BUILT-IN SERIAL PORTS

Omni Pro II has 5 serial ports (J1-J5) built onto the controller (labeled SERIAL 1 - SERIAL 5, respectively). The interface is a modular connector located in the upper left corner of the controller.

Each serial interface supports both RS-232 and RS-485 connections. RS-232 is the standard for connections to most personal computers and related systems. RS-485 can support greater wiring distances. The default setting is RS-232. To select RS-485, move the interface jumper (JP1-JP5) from the 232 to the 485 position. The jumpers (JP1-JP5) are located below the modular serial port connectors (J1-J5).

To connect a serial port to a PC, use the *Leviton* Model 21A05-2 Serial Cable Kit. Plug one end of the cable into one of the modular serial port connectors on the controller. Plug the other end into the Model 21A05-1 Communication Cable Adaptor (modular to DB-9 RS-232), which connects the *Omni* Pro II serial port to the computer's DB-9 RS-232 port.

To make your own serial cable to connect to a PC, follow the diagrams (Figure 14 and Figure 15). When making connections, be sure to correctly orient the cable as shown (with the tab on the modular cable facing up, make sure that the Yellow wire is at the top). Connect the Yellow, Green, Red, and Black wires to the DB-9 connector as shown. Also, on the DB-9 connector, connect Pins 1, 4, and 6 together and Pins 7 and 8 together.

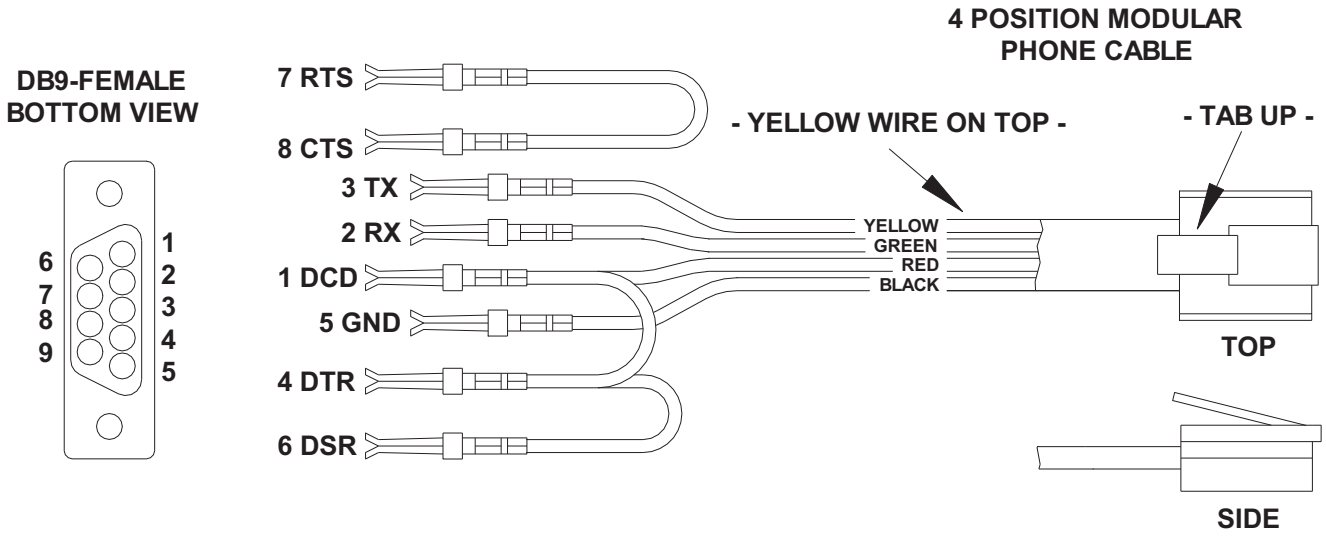

FIGURE 14 - RS-232 CONNECTIONS

Built-In Serial Port Pin Out

1 - N/C
2 - Ground
3 - DCD
4 - TX (transmit)
5 - RX (receive)
6 - 12V +

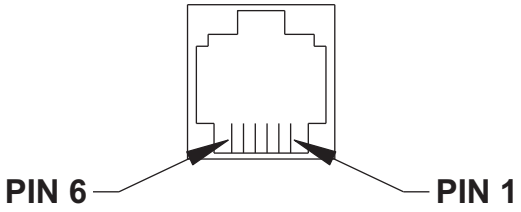

WEB VERSION

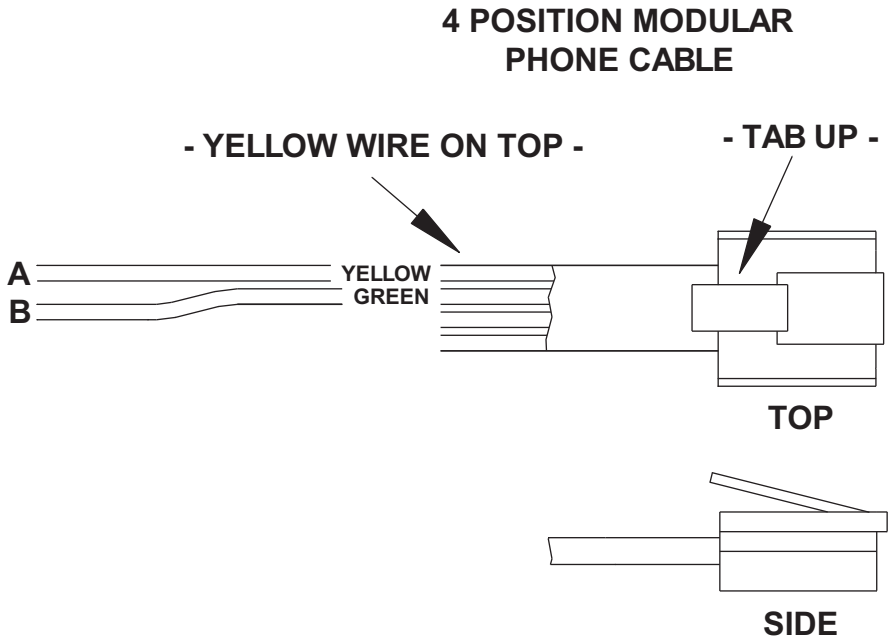

FIGURE 15 - RS-485 CONNECTIONS

BUILT-IN ETHERNET PORT

Omni Pro II has an Ethernet port (J6) built onto the controller (labeled ETHERNET). The Ethernet port allows a device to connect to the *Omni* Pro II controller via a network (i.e. Ethernet, Internet) using a secure, encrypted communication link. The Ethernet port transports *Leviton* application-level packets containing Omni-Link serial protocol messages over IP. The controller supports 3 unique client "sessions" which means 3 devices may actively be connected and communicating with the controller simultaneously over the Ethernet port.

CONTROLLER IP ADDRESS, PORT NUMBER, AND ENCRYPTION KEY

The controller's local IP address and port number set the local network parameters for the *Omni* Pro II controller. The encryption key is used to establish a private, secure connection with the connected device.

The following Setup items can only be assigned and changed from an *Leviton* console. These items can not be assigned or changed via PC Access; although the IP address and port number may be viewed via PC Access:

WEB VERSION

CONTROLLER IP ADDRESS

The controller's local network IP address is used to identify the *Omni* Pro II controller on the network. To view and assign the controller's local network IP address, from the Set Up menu, press the 6 (MISC) key. Using the down arrow key (↓), scroll to the following menu item:

```
IP ADDRESS
192.168.0.101          ↕
```

The format of the IP address is a 32-bit numeric address written as four numbers separated by periods. An IP address has two components, the network address, and the host address. The first two numbers (e.g. 192.168) represent the Class B network address and must be the same as the first two numbers of your local network. The second two numbers (e.g. 0.101) identify a particular host on the local network and may be assigned at random as long as each device on the local network has a unique address. Each number can be 0 to 255. Enter the 1, 2, or 3 digit number followed by the "#" key to move to the next number. After the 4thnumber has been entered, press the "#" key to store the IP address.

CONTROLLER PORT NUMBER

The controller's local network port number identifies the logical channel to the *Omni* Pro II controller. For example, port 80 is used for HTTP traffic; the controller's local network port number is used for Omni-Link traffic. To view and assign the controller's local network port number, from the previous Setup item (IP ADDRESS), press the down arrow key (↓).

```
PORT NUMBER            4369
0-65535                ↕
```

In most installations, the default port number can remain the same. Port numbers range from 0 to 65535. To change the port number, enter the new port number followed by the "#" key to store the port number. Port numbers 0 to 1024 are reserved for designated services and should not be used.

ENCRYPTION KEY

Encryption and decryption of data between the *Omni* Pro II controller and the connected device is based on the Advanced Encryption Standard (AES) using a 128-bit cryptographic key. A unique encryption key is randomly assigned to each *Omni* Pro II controller at the factory (no records of these keys are kept at the factory). It may be left the same (recommended) or it may be changed as desired. To view and assign the encryption key, from the previous Setup item (PORT NUMBER), press the down arrow key (↓).

```
ENCRYPTION KEY PT 1:
6F-1B-26-A2-FF-D9-E4-12  ↕
```

This key consists of 16 bytes (that is 16 2-digit values from 0-9 and/or the letters A-F). It is entered into the controller in two parts (PT 1 and PT 2) consisting of 8 bytes each. Enter the 2 digit value. To enter the digits A-F, first press the "OFF" key, then press the 0-5 key respectively (i.e. A1 = OFF 0 1 and CB = OFF 2 OFF 1). After the last digit (16thdigit) has been entered, press the "#" key to store "PT 1" of the encryption key. Press the down arrow key (↓) to enter "PT 2" of the encryption key.

```
ENCRYPTION KEY PT 2:
DC-67-48-8F-D1-3A-EF-70  ↑
```

After the last digit (16thdigit) has been entered, press the "#" key to store "PT 2" of the encryption key.

OMNI PRO II ETHERNET CONNECTIONS

Use a standard network cable to connect the controller to a hub, switch, or router. Use a network crossover cable when connecting the controller directly to the NIC card on a computer.

When connected to a switch or router, port forwarding must be configured. Port forwarding sets up public services on your network. The *Omni* Pro II controller listens for all IP/UDP communications addressed to it on the specified UDP port number. The router will forward all communications on the specified port to the *Omni* Pro II controller.

WEB VERSION

CONNECTING TO NETWORK VIA PC ACCESS

To access the controller over the network via PC Access:

1. Open an *Omni* Pro II account file.

2. Click *Configure >> Network*.

   - If you are connecting from the local network, enter the controller's IP address under "Network IP Address or Domain Name".

   - If you are connecting from the Internet, enter either the public IP address (the way to reach your local network via the Internet) or domain name (e.g. www.homeauto.com).

3. Enter the port number that is configured for the controller.

4. Select the *Encryption* tab. Enter the two part encryption key as it is displayed on the console.

5. Select *OK*.

6. Click *Connect >> Network >> Connect*.

7. Enter a valid code.

PC Access should change from "*Off-Line*" to "*On-Line*".

To connect to an Omni™ Pro II controller on a local network using *Leviton* PC Access, under *Configure >> Network* enter the controller's IP address:

(i.e. 192.168.0.101)

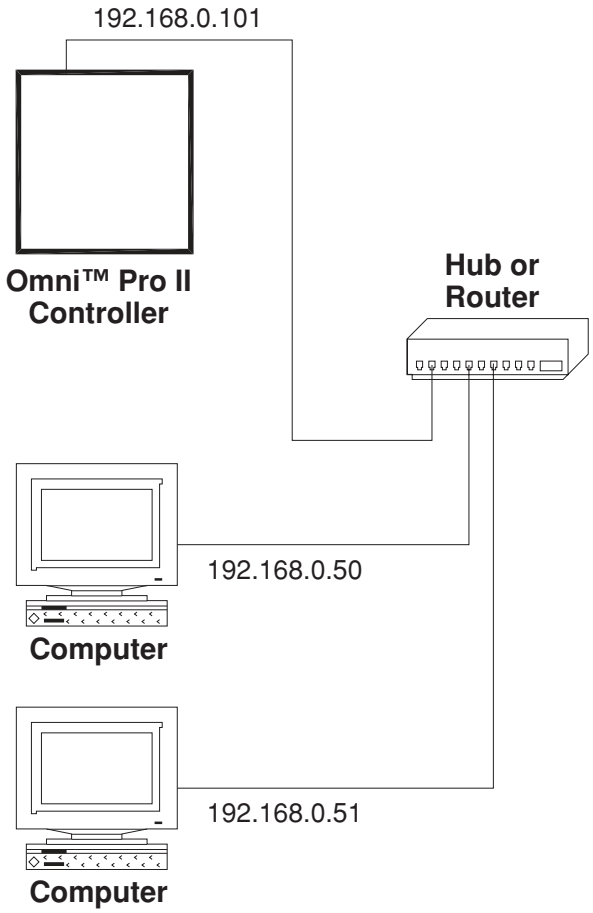

FIGURE 16 - LOCAL NETWORK

WEB VERSION

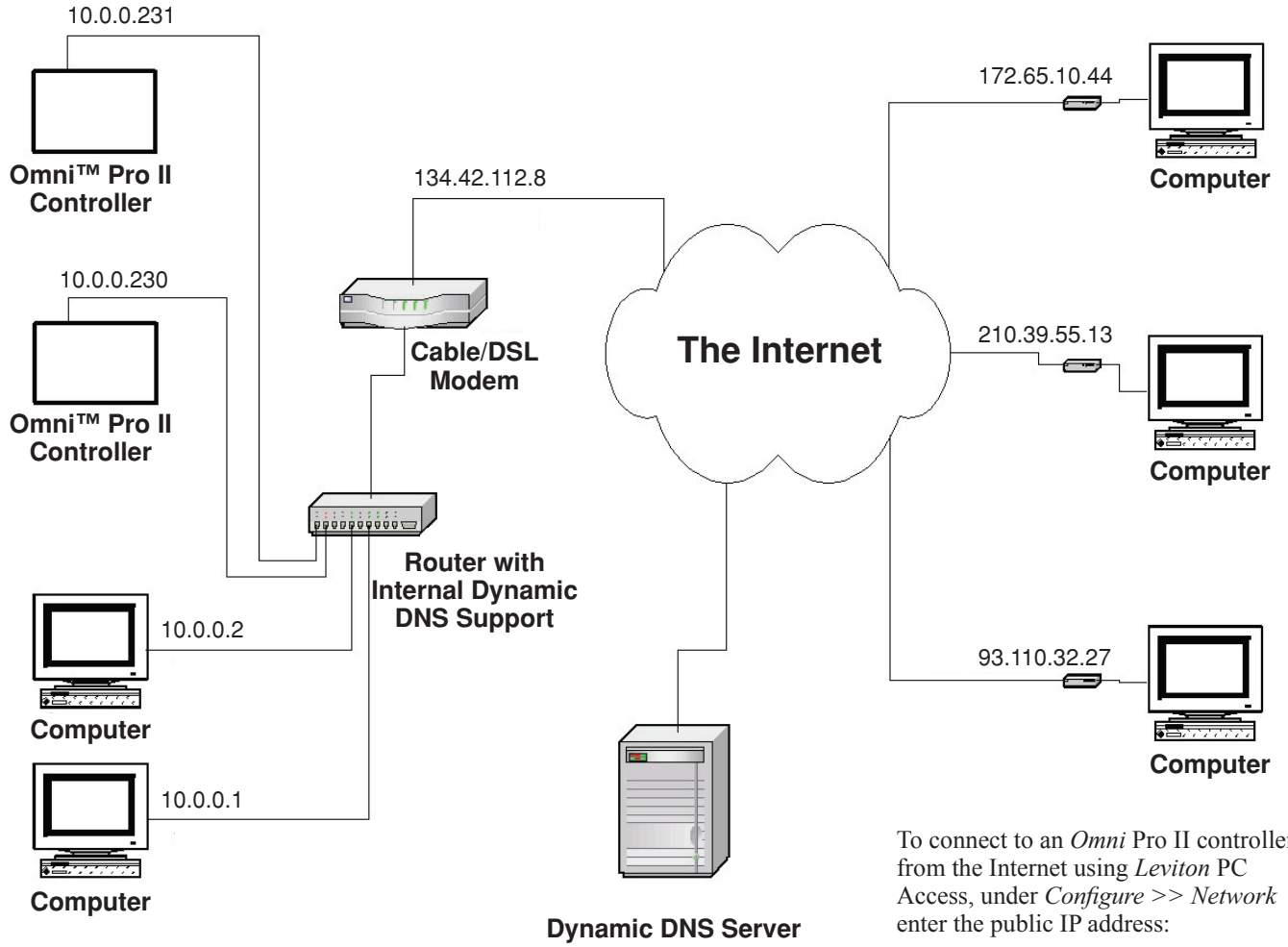

To connect to an *Omni* Pro II controller on a local network using *Leviton* PC Access, under *Configure >> Network* enter the controller's IP address:

(i.e. 10.0.0.230)

To connect to an *Omni* Pro II controller from the Internet using *Leviton* PC Access, under *Configure >> Network* enter the public IP address:

(i.e. 134.42.112.8)

FIGURE 17 - LOCAL / WIDE AREA NETWORK

If the controller is connected to the Internet via a dynamic IP address, to locate and communicate with the controller from remote locations over the Internet using *Leviton* PC Access, you must subscribe to a Dynamic DNS (Domain Name Service). Dynamic DNS is a service that maps your dynamic (changing) IP address to a static (permanent) hostname, allowing you to access your *Omni* Pro II controller over the Internet using your static hostname instead of an IP address.

A "client" program (typically provided by the Dynamic DNS provider) runs on a PC on your local network and is used to automatically update your Dynamic DNS provider with your current IP address. Several router/switch manufacturers have embedded a Dynamic DNS client into their router firmware. These devices work with several of the Dynamic DNS providers, including both free and commercial services. These devices are especially beneficial because the router can be powered up all the time, so the dynamic update is always current and is handled by a single device (the router/switch) in the local network. This allows you to locate and connect to the *Omni* Pro II controller without having a computer on the local network powered up and running.

WEB VERSION

SYSTEM POWER UP PROCEDURE

1. Carefully review hookups to the zones, grounds, sounders, and consoles.

2. Disconnect 1 lead of both the interior and exterior sounders.

NOTE: Follow this power up procedure to verify proper operation of the power supply, battery charger, and low voltage cut out relay.

3. The positive lead to the battery should be disconnected at this time. Make sure that the red battery wire is not touching anything.

4. Plug in the power transformer.

   - The AC ON LED should illuminate.

   - Within one minute, the STATUS LED should begin blinking at a rate of 1 blink per second. This indicates that the *Omni* Pro II processor and software are working.

   - The PHONE LED should be OFF (if all telephones are on-hook and the RJ31X jack is properly connected.

5. Unplug the power transformer to kill the system. Connect the red battery wire to the + (positive) battery terminal. The system should <u>not</u> start.

6. Plug in the power transformer. The system should start.

7. Unplug the power transformer. The system should continue to run on the battery (the STATUS LED will continue to flash).

8. Plug the transformer back in and secure it to the outlet using a screw.

CONSOLE CHECK OUT

1. The console(s) should be operating. Press ‘ * ‘ to silence the trouble beeper if it is beeping. Press OFF, 1, 1, 1, 1 (or the current User code) if the alarm is tripped. If the consoles are not operating properly, make sure that no two consoles have the same address, and check the wiring.

2. With all doors and windows closed and all motion detectors secure, the bottom line of the alerts display should read SYSTEM OK. If there are any trouble indications that occurred during installation, press ‘ * ‘ to acknowledge them and silence the beeper.

3. Set the time and date by pressing the 9 key. Enter the Master Code, then press the 2 key. Enter the time on the keypad, then the DATE (enter date as 6 characters: January 1, 02 as 010102).

4. The console should now show the time and date on the top line and “SYSTEM OK” on the bottom line of the alerts display.

TELEPHONE CHECK OUT

1. Verify that the Telephone Company surge arrestor is properly grounded.

2. Verify that the incoming telephone lines are run to the surge arrestor first, then from the surge arrestor to the RJ31X jack, then from the RJ31X jack to the house phones.

3. The PHONE LED, on the controller, should be off when the phones are hung up.

4. Pick up an in-house phone, wait about 1 second, then press the ‘ # ‘ key and enter a valid code. You should hear the Voice menu on the phone. If not, check to see that the RJ31X jack is properly wired and connected to the controller. There should be no interference from the Telephone Company while the menu is being read over the phone.

WEB VERSION

5. Record the owner's NAME and ADDRESS in the ADDRESS speech memory as shown in SETUP ADDRESS in the OWNER'S MANUAL (Press 8, 9, then 1111 or the current Master code to record the address).

NOTE: DO NOT record any TOUCH TONES in the ADDRESS!!

6. Check that all in-house phones are working.

BURGLAR ZONE CHECK OUT

1. For details on arming and disarming methods, refer to the Owner's Manual, Document No. 20R00-29.

2. With all doors and windows closed and all motion detectors and security devices secure, the console display should read "SYSTEM OK" on the alerts display.

3. If any zones are abnormal, check your wiring. If the battery indication is low, make sure that the battery is connected securely. Give the battery a chance to charge.

4. On the alerts display, have a partner go around the house and trip each sensor one at a time. The display should indicate the correct zone "NOT RDY" when the zone is tripped, then return to "SYSTEM OK" when the zone is secured. Be sure that the zone type indicated (ENTRY/EXIT, PERIMETER, ETC.) is correct for the zone being tested.

5. If the zone being checked is armed, (e.g. PANIC zone type, which is always armed) the alarm will be activated. Press OFF enter a valid User code to silence the alarm, or bypass the PANIC zone(s) before you start.

6. Reconnect the sirens. Be sure that no one is standing near a siren. Activate the alarm, and ensure that both the inside and, after a delay, outside sirens activate.

FIRE ZONE CHECK OUT

1. Press ' # ' and enter a valid code return the console to the alerts display. Check the fire zone per the sensor manufacturer's instructions. The fire alarm should be activated (pulsing interior sounder, exterior siren).

2. Press ' * ' to silence the alarm. The display will still indicate that the FIRE ZONE is in alarm.

3. Press DAY or NIGHT or AWAY and the User code to arm the system, then OFF and the User code to disarm. This arm/disarm cycle will reset the smoke detector. If the cause for alarm (i.e. smoke) has cleared, the alerts display will return to SYSTEM OK.

NOTE: Be sure that the DIAL OUT DELAY is long enough so that you can cancel the alarm before the system dials out.

CUSTOMER CHECKOUT

After you have completed the system check out and everything works, be sure that the customer knows how to:

1. Disarm/silence the system (OFF, 1111 or current User code). **HAVE THE CUSTOMER PRACTICE**!

2. Show the customer how to change the codes.

3. Get the menu over the in-house phones.

WEB VERSION

You should also:

4. Demonstrate arming and disarming.

5. Demonstrate home control.

6. Demonstrate setup and programming.

7. Show him/her how to program the dial out numbers.

8. Deliver the Owner's Manual and other documentation.

9. If the customer has subscribed to a central monitoring service, this should be explained.

IN CASE OF TROUBLE

CONSOLES

If you experience trouble that seems to be with a console, try disconnecting the console and running the console self test as described under CONSOLE HOOKUPS in this manual. If the console does not run the self-test properly, it should be returned to *Leviton* for repair.

"NO CONTROLLER DATA" or erratic operation of the LCD display could be a result of: A and B terminals connected backwards, poorly, or 2 or more consoles have the same address.

CONSOLE SELF TEST

Use the self test mode to verify the proper operation of the console.

1. Disconnect the console from the controller. Connect +12 and GND terminals to a 12-volt source (or a fresh 9-volt transistor battery.) The console beeper will beep twice per second, the LCD backlight and the keypad key will be lit, and the LCD will display "NO CONTROLLER DATA".

2. Simultaneously press and hold the 7 and the down arrow ( ) keys for approximately 3 seconds. The beeper will beep 5 times, the LCD backlight and keypad backlight will turn off, and the display will clear. The LED at the top right corner of the console will start to cycle through its different colors (red, green, yellow, then turns off). At the end of each cycle the beeper will beep once.

3. Press any key. The LCD backlight and the keypad key backlight will turn on.

4. Press the keys in the following order and verify that the appropriate character fills the screen. 0 - 9, *, #, AWAY (A), NIGHT (B), DAY (C), OFF (D), (filled blocks), and (blanks).

If this is successful, the console is good. Simultaneously press and hold the 7 and down arrow ( ) keys to exit the self test mode or disconnect power.

CONTROLLER

Check the AC ON (bottom) LED. If it is not lit, check for 24 VAC at the transformer connections.

Check the STATUS (top) LED on the controller board. It should be blinking once per second, indicating the proper operation of the microprocessor and memory. If not, try powering the system down by disconnect the power transformer and battery, then reconnect both. The status light should begin blinking.

If the AC ON LED is on and the STATUS light is still not blinking, check the AUX +12 V with a DC voltmeter. It should be 13.7 volts. If not, make sure that there isn't too much load on the system. Disconnect all loads. If the STATUS LED still won't blink, there is a problem with the controller board and it must be returned to *Leviton* for repair.

WEB VERSION

Phone line problems, or problems with the *Omni* Pro II voice are usually the result of the RJ31X jack being improperly wired. Check RJ31X jack wiring and polarity carefully, as described in TELEPHONE CONNECTIONS.

In the event that the controller is found defective, the controller board can be removed without disconnecting the entire wiring from their terminals. The terminal strips can be removed from the controller board. Then the controller (or processor board) can be repaired and reinstalled easily.

Follow this procedure for removing the controller board:

1. If possible, upload the programs and configuration. (This will not be possible if the status LED isn't flashing or if you can't get the voice to work.)

2. Unplug the power transformer.

3. Disconnect the battery

4. Disconnect the RJ31X modular cable at the jack!! If you only disconnect it at the *Omni* Pro II controller only, the house phones won't work.

5. Disconnect the X-10 cable. Disconnect the serial cable(s). Disconnect Ethernet cable.

6. Carefully remove the four terminal strips from the controller board. Gently push down on terminal strip retention clips. These clips are located on either end of the strip and 2 in the middle. Slowly pull strip away from terminal block socket and secure.

7. Remove 9 screws and washers; 3 on the top edge, 3 on the bottom edge, and 3 in the middle of the controller.

8. Remove the controller board.

9. Wrap the controller board with protective material and pack carefully. *Leviton* will not be responsible for returned items damaged due to inadequate packaging.

10. Call *Leviton* with the serial number for a Return Authorization number to help us track your return. Write the R. A. # on the outside of the package.

11. Return the controller to *Leviton*. Please include your return address, any special shipping instructions and daytime phone number so that we can reach you if we have any questions. Also include a brief description of the problem that you are having.

12. INSTALLATION: follow the removal process in reverse. Follow the POWER UP and CHECK OUT procedures in this manual.

13. NOTE: When a controller is returned from being repaired, all setup and programming is lost. The board is returned with the factory default setup and programming.

FOR HELP: Call *Leviton* between the hours of 9:00 AM and 5:00 PM Central time, Monday - Friday, at (800) 229-7256.

WEB VERSION

DIGITAL COMMUNICATOR

The *Omni* Pro II digital communicator uses Contact ID alarm reporting format. Compatible receivers are Ademco, Radionics, Osborne-Hoffman, Linear, FBI, and Silent Knight. It is up to the installer to verify compatibility. At the time of installation, the installer is required to verify compatibility and phone line seizure of the Digital Communicator.

If the digital dialer does not get a handshake signal from the central station 45 seconds after it begins dialing, it hangs up and tries again. The dialer will try the FIRST PHONE NUMBER 5 times, then go to the SECOND PHONE NUMBER and try that 5 times. After that, the system will indicate COMMUNICATIONS FAILURE on the console display and the digital communicator will not try again until another reportable event occurs.

The digital communicator will not dial out until the DIAL OUT DELAY has expired. If the alarm is canceled prior to the expiration of the DIAL OUT DELAY, no transmission will take place. After the DIAL OUT DELAY has expired, though, all alarm trips will be transmitted followed by a CANCEL code.

When the digital communicator is used, all voice dial outs will be delayed for five minutes after the expiration of the dial out delay to allow time for the central station to call the premises after an alarm code has been sent. If the digital communicator is unable to successfully communicate with the central station, the user will be alerted to the trouble condition. When the system status is requested using the voice, this condition is reported over the phone as “SECURITY PHONE MESSAGE” trouble.

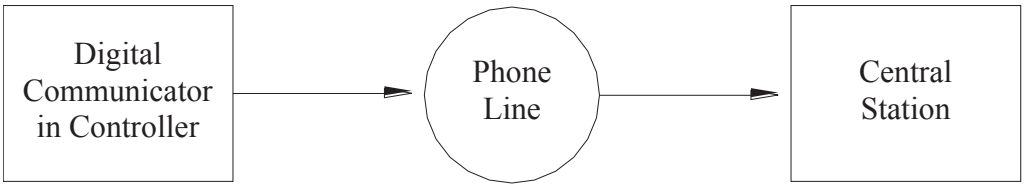

Single Line Transmission Signal System Configuration

DESCRIPTION OF CONTACT ID

Contact ID reporting allows very specific event codes to be sent to the central station. A complete report takes under three seconds. Contact ID reporting uses predefined event codes that allow the central station to quickly identify the condition being reported. The specific security zone or user code is identified as part of the report.

For each event code transmitted, the report also includes an event qualifier that identifies whether the report is for a new event (such as a security zone trip), or a restoration of an event (such as a security zone no longer tripped). Trouble conditions are reported, as well as restoration of these trouble conditions. For security armings and disarmings, this event qualifier is also used to identify whether the report is for an arm or disarm. The reporting format for Contact ID is listed in Appendix A in this manual.

OPENING AND CLOSING REPORTS

The *Omni* Pro II system can send opening and closing reports by user to the central station.

When the system is disarmed by user code 1-16, the communicator can call the central station and report that the system was disarmed (opened) with the user code that was used. When the system is armed by user code 1-16, the communicator can call the central station and report that the system was armed (closed) with the user code that was used.

If any other code or a method disarms the system (i.e. Code 17-99, Keyswitch, or Scheduled Program), the communicator will send a generic OPEN report to the central station. The code that is sent is defined as OTHER OPEN. If the system is armed by any other method other than one that requires a code (i.e. Keyswitch or Scheduled Program), the communicator will send a generic CLOSE report to the central station. The code that is sent is defined as OTHER CLOSE.

WEB VERSION

INSTALLER SETUP

This section describes the items that the installer must setup as part of system installation. The Installer Setup mode is used to configure the general operation of the system, the Outputs, the Areas, the Zone Types, the Digital Communicator, and various other settings. This information is covered only in this manual. All other SETUP items, including delay times, names and voices, voice dialer, and codes are covered in the Owner's Manual, Document No. 20R00-29.

SETUP items are stored permanently in the system, even if the battery and AC power are disconnected. The "default" settings are the ones that have been set at the factory. You can review or change the setup items easily, as shown below.

Note: Before an installer can access the Installer Setup items, a user with a Level 2 code must first enable access for the installer with a Level 3 code by setting the Enable Installer option to "Yes". Once enabled, the installer may access the Installer Setup items by using the default Installer Code of 1111.

There are two Level 3 codes: Installer Code and PC Access Code. There is one Level 4 code: F/W Update Code

FIRMWARE UPDATE CODE

A Firmware Update Code is required to update the firmware in the controller using PC Access software. To configure a Level 4 Firmware Update Code, press the 9 key and enter the F/W Update Code.

The default Firmware Update Code is 4444.

```
F/W UPDATE CODE:
0000-9999                ↕
```

To change the code, enter a new four-digit number, and then press the ' # ' key.

SETUP MENU

To access the SETUP menu, press the 9 key and enter the Installer Code.

SET UP ARMING

To configure different arming and disarming options, from the Setup menu, press the 5 (ARM) key.

ENTRY DELAY

The Entry Delay is the time, in seconds, that the user has to disarm the alarm system after entering the protected premises. The Entry Delay **only** applies to the entry/exit zone (e.g. entry doors). If any other security zone type is violated, there will be no entry delay and the alarm will sound immediately.

When someone enters through a door on an entry/exit zone, certain other zones in the entry path are delayed too. This allows the user to get to a console and disarm the security system.

```
ENTRY DELAY:             30
30-60 SECONDS            ↓
```

The default Entry Delay is 30 seconds. You may change it from 15 to 45 seconds.

WEB VERSION

EXIT DELAY

The Exit Delay is the time, in seconds, that the user has to leave the protected premises when the security system is armed using the Timed Arming Method.

```
EXIT DELAY:              60
45-180 SECONDS           ↕
```

The default Exit Delay is 60 seconds. You may change it from 45 to 180 seconds.

EXIT TIME RESTART

When Exit Time Restart is set to Yes, the Exit Delay will restart if the same exit zone is violated twice within the original exit delay when using the Timed Arming Method. For example, after arming the system the front door is opened to leave, and then closed once exited, if the front door is opened again while the exit delay is still in effect, the exit delay will be restarted. This is designed to give additional time to exit without causing an alarm. The exit time will only be restarted once within a given arming period.

```
EXIT TIME RESTART:       1
0=NO 1=YES               ↕
```

The default setting for Exit Time Restart is Yes.

UNVACATED PREMISES

When Unvacated Premises is set to Yes, if the alarm is armed in Away or Vacation mode when using the Timed Arming Method and no exit zone is violated during the exit delay (i.e. the premises was not vacated), the system will automatically arm to Day mode at the expiration of the exit delay.

```
UNVACATED PREM:          1
0=NO 1=YES               ↕
```

The default setting for Unvacated Premises is Yes.

ENTRY/EXIT CHIME

When Entry/Exit Chime is set to Yes, the console(s) will beep once when a door on an entry/exit zone is opened, even if the alarm system is disarmed. This lets you know when someone enters and leaves. The default setting for Entry/Exit Chime is Yes.

PERIMETER CHIME

When Perimeter Chime is set to Yes, the console(s) will beep once when a perimeter zone is opened, even if the alarm system is disarmed. The default setting for Perimeter Chime is Yes.

ALL ON FOR ALARM

This option will instruct *Omni* Pro II to execute an All On lights command in the event that any type of alarm occurs.

The default setting for All On For Alarm is Yes.

BEEP ON TROUBLE

When Beep on Trouble is set to Yes, whenever a trouble condition is detected the console will beep twice per second, continuously. To disable the console from beeping when a trouble occurs, set Beep on Trouble to No.

The default setting for Beep on Trouble is Yes.

WEB VERSION

INSTALLER SETUP MENU

To access the INSTALLER SETUP menu, from the Setup menu, press the # (INST) key.

```
INSTALLER SETUP MENU:
1=CTRL 2=ZONE 3=DCM      ↓

4=AREA 5=TEMP 6=MISC

7=EXP 8=ZOPT             ↑
```

SETUP CONTROL

To configure X-10, *UPB*, voltage outputs, and *Vizia RF Z-Wave* options, from the Installer Setup menu, select the 1 (CTRL) key. The output type for both the interior and exterior horns may also be changed.

Press ( ) to advance to the next item, ( ) to go back.

X-10 HOUSE CODE

The base X-10 house code must be specified. The base house code is the house code for units 1-16 and is referenced as house code 1. The house code for the units 17-32 is the next house code after the base house code, or house code "B" if the base house code is "A". House codes "C" through "P" follows for Units 33-256, respectively.

```
X-10 HOUSE CODE:         A
1-16=A-P                 ↓
```

UPB NETWORK ID

The Network ID is a unique number between 1 and 255 which identifies your *UPB* Network.

```
UPB NETWORK ID:          1
1-255                    ↕
```

Enter the *UPB* Network ID (1-255) followed by the ' # ' key.

UPB PASSWORD:

The Network Password is a 4-digit number between 0001-FFFF that is used to protect your *UPB* network from unauthorized changes to the internal settings of your *UPB* devices.

```
UPB PASSWORD:         1234
0000-FFFF                ↕
```

Enter the *UPB* Password (0000-FFFF) followed by the ' # ' key.

To enter the digits A-F, first press the "OFF" key, then press the 0-5 key respectively (i.e. "1A2B" = 1 OFF 0 2 OFF 1 #).

WEB VERSION

***UPB* STATUS TIME (STATUS TRACKING):**

When using HLC, "Status Tracking" is used to update the status of each HLC device in a room whenever a scene is executed in that room. For example, the scene "A" button is pushed on a Room Controller in the Living Room. All of the lighting loads in the Living Room are changed, but the status for the individual lighting loads isn't updated in *Omni* Pro II until a status request message is sent to each unit. When "Status Tracking" is enabled, this is done automatically after a scene is executed.

The value set for the *UPB* Status Time is the amount of seconds that the *Omni* Pro II controller waits before requesting status after a scene is executed. By default, the time is set to 5 seconds.

This gives lighting loads (with varying fade rates) the necessary time to "settle down" before the status is requested.

```
UPB STATUS TIME:        5
0-255 SECONDS           ↕
```

Enter 1-255 for 1 to 255 seconds. Enter 0 to disable "Status Tracking".

Note: "Status Tracking" must be enabled for *Omni* Pro II to accurately set the LED indicators on Room and House Controllers. *UPB*

TRANSMIT COUNT

The *UPB* Transmit Count is used to specify the number of *UPB* transmission attempts when *UPB* signals are sent from the *Omni* Pro II controller. The controller will also configure *Leviton UPB* devices with this same number of attempts; hence, other *UPB* devices on the network will also transmit using the specified number of transmission attempts.

```
UPB TRANSMIT COUNT:     2
2-4                     ↕
```

This setting is particularly useful in large installations where a Split Phase Repeater is connected on the *UPB* network.

Note: A higher setting will increase *UPB* reliability (particularly when a Split Phase Repeater is connected); however, may reduce performance (i.e. because of the additional *UPB* transmissions, it may reduce the speed in which devices are controlled).

X-10 3-PHASE

This setting is used to select whether the X-10 signal is transmitted only at zero crossing for single phase (120V/240V) electrical systems or is transmitted at 0, 60, and 120 degrees for three phase electrical systems.

```
X-10 3-PHASE:           0
0=NO 1=YES              ↕
```

To turn 3-Phase On, press 1 then ' # '. To turn 3-Phase Off, press 0 then ' # '. The burst at 60 and 120 degrees will be eliminated.

The default setting for 3-Phase is No.

OUTPUT TYPES

An output type must be specified for each of the voltage outputs and for the interior and exterior horn outputs.

The first group of outputs is global. This means that the output is valid for any area. The sounder and communicator outputs will be activated for an alarm in any area. The remaining types are area specific. This means that the output is only valid in the specified area. Area specific sounder and communicator types will only be activated for alarms in that area.

WEB VERSION

The following output types are available:

OUTPUT TYPE	NUMBER									DESCRIPTION
	Global	**A1**	**A2**	**A3**	**A4**	**A5**	**A6**	**A7**	**A8**	
GENERAL PURPOSE	0	0	0	0	0	0	0	0	0	General Purpose Output
OK TO ARM	1	17	33	49	65	81	97	113	129	OK To Arm Output
ARMED	2	18	34	50	66	82	98	114	130	Armed Output
PRE-ALM SNDR	3	19	35	51	67	83	99	115	131	Pre-Alarm Sounder
INT SNDR	4	20	36	52	68	84	100	116	132	Interior Sounder
INT BURG SNDR	5	21	37	53	69	85	101	117	133	Interior Burglary Sounder
INT FIRE SNDR	6	22	38	54	70	86	102	118	134	Interior Fire Sounder *
EXT SNDR	7	23	39	55	71	87	103	119	135	Exterior Sounder
EXT BURG SNDR	8	24	40	56	72	88	104	120	136	Exterior Burglary Sounder
EXT FIRE SNDR	9	25	41	57	73	89	105	121	137	Exterior Fire Sounder*
BURG COMM	10	26	42	58	74	90	106	122	138	Burglary Communicator
FIRE COMM	11	27	43	59	75	91	107	123	139	Fire Communicator
AUX COMM	12	28	44	60	76	92	108	124	140	Auxiliary Communicator
SWITCHED POWER	13	29	45	61	77	93	109	125	141	Switched Power Output

*Interior and Exterior Fire Sounders pulsate in a 3 pulse temporal pattern.
For output types, the current setting is shown on the bottom line. Press the ‘ # ‘ key to select a new type from a list of types. The display shows:

```
SELECT TYPE:          0
GENERAL PURPOSE       ↕
```

Use the Up and Down arrow keys to scroll through the list, or select the appropriate output type number, and then press ‘ # ‘ to enter the new type. If the Interior Horn is configured as a “General Purpose” output, Unit Number 393 is used to control the output. If the Exterior Horn is configured as a “General Purpose” output, Unit Number 394 is used to control the output. In this configuration, Unit Numbers 393 and 394 should not be used as “Flags”.

Z-Wave NODE ID

The Node ID is a unique number between 1 and 232 which identifies a *Z-Wave* device on the *Vizia RF Z-Wave* Network. Each Node must be associated (mapped) with a unit number in the *Omni* Pro II controller.

For *Vizia RF Z-Wave* pushbutton controllers, enter the Node ID for the *Z-Wave* pushbutton controller associated with that room (e.g. Unit 1, Unit 9, Unit 17, etc). If desired, more than one pushbutton controller may be assigned to a room by associating the pushbutton controller on any unit number in that room. If a second pushbutton controller is used, do not assign in a name in the controller.

```
UNIT 1 NODE ID:       0
0-232                 ↕
```

THROUGH

```
UNIT 232 NODE ID      0
0-232                 ↑
```

Enter the Node ID (0-232) for each *Z-Wave* device followed by the ‘ # ‘ key.

Enter 0 if there is no node associated with the specified unit number.

WEB VERSION

SETUP ZONES

To configure zone expansion and the zone types (definitions) for each security zone, from the Installer Setup menu, select the 2 (ZONE) key.

Note: There are zone options that define the way that each zone functions. To access Zone Options, press the 8 (ZOPT) key.

ZONE EXPANSION

Expansion Enclosures can be used to add additional zones to the *Omni* Pro II system. Each Model 17A00 Expansion Enclosure adds 16 zones to the system. If used, specify the number of Expansion Enclosures (1-8) used:

```
NUMBER OF EXP ENCL       0
1-8                      ↕
```

NOTES:

1. Up to 2 Model 10A06 Hardwire Expanders can be used with *Omni* Pro II. Zones 1-16 on the first Expander are Zones 17-32 on *Omni* Pro II. Zones 1-16 on the second Expander are Zones 33-48 on *Omni* Pro II.

2. When used, the Model 10A06 Hardwire Expander Modules must be configured under Setup | Installer | Expansion.

3. Zones 1-16 on the first Expansion Enclosure are Zones 49-64 on *Omni* Pro II. Zones 1-16 on the 2nd - 8th Expansion Enclosure are Zones 65 -176, respectively on *Omni* Pro II.

Z 1 TYPE THROUGH Z176 TYPE

This item specifies the zone type for each zone. All choices are listed in this manual under DESCRIPTION OF ZONE TYPES.

For zone types, the current setting is shown on the bottom line.

```
ZONE 1 TYPE:             64
AUXILIARY          #=CHNG↕
```

THROUGH

```
ZONE 176 TYPE:           64
AUXILIARY          #=CHNG↑
```

To change a zone type, press the ‘ # ‘ key, then use the arrow keys to scroll through the list of zone types. Press the ‘ # ‘ key to select a new type. The display shows:

```
SELECT TYPE:             1
PERIMETER                ↕
```

WEB VERSION

ZONE RESPONSE TIME

All zones, in the *Omni* Pro II are set to a 300 millisecond fixed response time.

ZONE TYPES

ZONE TYPE	NUMBER	DESCRIPTION
ENTRY/EXIT	0	Entry/Exit
PERIMETER	1	Perimeter
NIGHT INT	2	Night Interior
AWAY INT	3	Away Interior
LATCH PERIM	6	Latching Perimeter
LATCH NIGHT INT	7	Latching Night Interior
LATCH AWAY INT	8	Latching Away Interior
PANIC	16	Panic
POLICE EMERG	17	Police Emergency
SILENT DURESS	18	Duress
TAMPER	19	Tamper
LATCH TAMPER	20	Latching Tamper
FIRE	32	Fire
FIRE EMERG	33	Fire Emergency
GAS	34	Gas Alarm
AUX EMERG	48	Auxiliary Emergency
TROUBLE	49	Trouble
FREEZE	54	Freeze
WATER	55	Water
FIRE TAMPER	56	Fire Tamper
AUXILIARY	64	Auxiliary
KEY SWITCH	65	Keyswitch Input
SHUNT LOCK	66	Shunt Lock
EXIT TERMINATE	65	Exit Terminate Pushbutton
ENERGY SAVER	80	Programmable Energy Saver Module
OUTDOOR TMP	81	Outdoor Temperature
TEMPERATURE	82	Temperature
TEMP ALARM	83	Temperature Alarm
HUMIDITY	84	Humidity
ER OUTDOOR TMP	85	Extended Range Outdoor Temperature
ER TEMPERATURE	86	Extended Range Temperature
ER TEMP ALARM	87	Extended Range Temperature Alarm

LATCHING ZONE TYPES

When any device (other then FIRE or GAS) is connected to SWITCH 12V or a Switched Power Output, the zone must be configured as one of the LATCHING ZONE TYPES (latching perimeter, latching night interior, latching away interior, and latching tamper). LATCHING ZONE TYPES ignore the status of that zone during power cycles.

Used primarily when the FIRE ALARM VERIFICATION feature is being used or if more than one area is being protected. This type will ignore the status of LATCHING ZONES (i.e. Glassbreak Detectors) when the power is switched to reset devices.

WEB VERSION

DESCRIPTION OF ZONE TYPES

ENTRY/EXIT

ENTRY/EXIT ZONE types are intended for doors. ENTRY/EXIT ZONES are armed in security modes DAY, NIGHT, AWAY, and VACATION. In DAY and AWAY modes, there is an entry delay (defined by ENTRY DELAY) on ENTRY/EXIT ZONES to allow you to get into the house and turn off the alarm before it sounds. In NIGHT & DAY INSTANT mode, there is no entry delay, so that the alarm sounds immediately if someone opens a door.

If an ENTRY/EXIT ZONE is tripped first, certain other zones in the entry path will are delayed.

PERIMETER and LATCHING PERIMETER

PERIMETER ZONE types are intended for windows and exterior doors not requiring an entry delay. All PERIMETER ZONES are armed in security modes DAY, NIGHT, AWAY, and VACATION. There is not an entry delay on a perimeter zones. If a window or door on this zone is opened while the security system is in DAY, NIGHT, AWAY or VACATION mode, the alarm will sound immediately. LATCHING PERIMETER ZONES ignore the status of that zone during power cycles.

NIGHT INTERIOR and LATCHING NIGHT INTERIOR

NIGHT INTERIOR ZONES are intended for motion detectors in areas where no one should be while you are sleeping in your home. For example, if you have a two-story home and sleep upstairs, your downstairs motion detector(s) should be on a NIGHT INTERIOR ZONE.

NIGHT INTERIOR ZONES are armed in security modes NIGHT, VACATION, and AWAY only. There is no delay on a NIGHT INTERIOR ZONE. Night interior zones are NOT armed in DAY or DAY INSTANT mode, so that you may move about freely in your home when the security system is in DAY or DAY INSTANT mode, while still having the windows and doors protected. LATCHING NIGHT INTERIOR ZONES ignore the status of that zone during power cycles.

AWAY INTERIOR and LATCHING AWAY INTERIOR

AWAY INTERIOR ZONES are for areas of your home where no one should be while you are away. In the previous example, your upstairs motion detector(s) should be on an AWAY INTERIOR ZONE. AWAY INTERIOR ZONES are armed only when the security mode is AWAY. LATCHING AWAY INTERIOR ZONES ignore the status of that zone during power cycles.

PANIC

PANIC ZONES are for emergency pushbutton switches and hold-up devices. PANIC ZONES are always armed, even if the security mode is OFF. There are no delays on PANIC ZONES. An emergency dial out is activated after the DIAL OUT DELAY.

TAMPER and LATCHING TAMPER

This zone type is used to monitor tamper switches in security sensors, enclosures, and on other security devices. If the tamper switch connected to the device is violated and if the security system in the respective area is disarmed, the zone will report tamper. If the security system in the respective area is armed, the zone will cause an alarm. This zone will make a digital dial out when violated when the respective security area is either armed or disarmed.

LATCHING TAMPER ZONES ignore the status of that zone during power cycles.

POLICE EMERGENCY

This zone type activates the burglar alarm and sounder. An emergency dial out is activated after the DIAL OUT DELAY.

DURESS EMERGENCY (SILENT DIAL OUT)

DURESS ZONES are for emergency pushbuttons that activate a SILENT dial out, (no lights flashing and no sounder). If this zone is accidentally tripped, you will not know that the *Omni* Pro II is making a silent dial out, and hence won't know to stop it.

To stop a silent dial out once it has started, you must go to the console and press OFF then enter your code.

WEB VERSION

SUPERVISED FIRE

Any zone can be programmed as a SUPERVISED FIRE ZONE. All fire detectors must be configured as a SUPERVISED FIRE ZONE and connected as shown in this manual. When Zones 1-4 are configured as a SUPERVISED FIRE ZONE, the corresponding Zone Jumpers (JP11-JP14) must be in the "SMK" (smoke) position.

FIRE EMERGENCY

This zone type activates the fire alarm for a normally closed (open for alarm) and open collector (short to ground for alarm) switches.

GAS

This GAS ZONE will generate an alarm, activate the sounder (on - off - on - long off), and make a dial out. This zone type requires an external 1000-ohm end-of-line resistor. When Zones 1-4 are configured as a GAS ZONE, the corresponding Zone Jumpers (JP11-JP14) must be in the "SMK" (smoke) position.

AUXILIARY EMERGENCY

This AUXILIARY EMERGENCY ZONE type will generate an alarm (console beeper - no sirens) and make an emergency dial out when the zone is violated. An emergency dial out is activated after the DIAL OUT DELAY.

TROUBLE

This zone type can be used to monitor the status of an external device, such as the battery status of a wireless security receiver. It can also used to record events in the event log (i.e. driveway activation, opening of a gate, etc.) without setting off the alarm.

When the zone is tripped, the zone name will be displayed on the display as "NOT RDY". The alarm is not activated, regardless of the security mode. The trouble is logged in the event log. The digital communicator (if used) will report the alarm code for the zone. The voice dialer will not be activated.

FREEZE

This FREEZE ALARM ZONE type will generate an alarm (console beeper, no sirens) and make an emergency dial out.

WATER

This WATER ALARM ZONE type will generate an alarm (console beeper, no sirens) and make an emergency dial out.

FIRE TAMPER

This zone type is used to monitor the wiring to bells and sirens (other than those connected to the Horn Output). The zone will report trouble if an open, short, or other wiring problem is detected in the supervised bell circuit. This zone will make a digital dial out when violated. Connect a wire from the Fire Tamper zone (+) to an output configured as a Sounder.

AUXILIARY

A zone defined as AUXILIARY is ignored for security. It is used to activate macros or to conditionalize programs. This is the default setting for all zones. Zones that are not in use should be configured as AUXILIARY.

KEYSWITCH INPUT

This zone is used to arm AWAY and Disarm the *Omni* Pro II security system using a toggle (to ground) keyswitch or keypad.

SHUNT LOCK

This zone is used in conjunction with the Shunt Lock Arming Method and Shunt Lock Disarming Method. When arming, this zone type detects when the installed shunt lock has been activated (i.e. locked). When disarming, this zone type detects with the installed shunt lock has been deactivated (i.e. unlocked).

WEB VERSION

EXIT TERMINATE PUSHBUTTON

This zone is used in conjunction with the Pushbutton Arming Method. When arming, this zone type detects when the installed pushbutton on the outside of the supervised premises has been activated.

PROGRAMMABLE ENERGY SAVER MODULE

This zone type is for use with the Programmable Energy Saver Modules (PESM). It converts the Zone and the corresponding Output to operate the PESM. Only Zones 9-16 can be programmed as a PESM.

OUTDOOR TEMPERATURE AND ER OUTDOOR TEMPERATURE

Use this zone type for Outdoor Temperature Sensors. The outdoor temperature can be displayed on the console, spoken over the telephone, or displayed on an *Leviton* Communicating Thermostat.

TEMPERATURE AND EXTENDED RANGE TERMPERATURE

The general-purpose TEMPERATURE ZONE type is typically used to monitor indoor temperatures and control devices. It sets the zone secure/not ready state for program conditionals and event button activation programs.

If FREEZE ALARM is enabled, it reports a potential freeze condition if the temperature falls below 40°.

TEMPERATURE ALARM AND EXTENDED RANGE TEMPERATURE ALARM

The TEMPERATURE ALARM ZONE type will generate an alarm (console beeper, no sirens) and dial out if the temperature goes above the high setpoint or drops below the low setpoint.

HUMIDITY

The HUMIDITY ZONE type is used to monitor indoor and outdoor humidity levels from 0 to 100 percent using the Model 31A00-2 Indoor/Outdoor Temperature and Humidity Sensor. It sets the zone secure/not ready state for program conditionals and event button activation programs.

NOTE ON TEMPERATURE AND HUMIDITY ZONE TYPES

Outdoor temperature, temperature, and temperature alarm zone types all have HEAT (LOW) and COOL (HIGH) setpoints. The zone is “Not Ready” when the temperature is above the high setpoint or below the low setpoint. The zone is “Secure” when the temperature is between the setpoints. Setting a setpoint to 0 disables the setpoint.

Except for a type 83 and 87, the alarm is not activated. The zone “Not Ready” or “Secure” status is used to activate button programs and program conditionals.

WEB VERSION

SETUP DIGITAL COMMUNICATOR

To setup the Digital Communicator, from the Installer Setup menu, select the 3 (DCM) key.

FIRST PHONE NUMBER, FIRST ACCOUNT NUMBER

The first item in the DIGITAL COMMUNICATOR category is the FIRST PHONE NUMBER. Enter the FIRST PHONE NUMBER on the keypad. This enables the Digital Communicator.

You can cause a 2-second pause during dialing by pressing the DAY key.

To prevent a call waiting line from interfering with the dial out, you may use the call waiting cancel sequence at the beginning of the number. The call waiting sequence is typically ‘ * 7 0 T ‘ (T = pause); however this may vary depending on your region.

If you are using the call waiting sequence, only use it on the “FIRST PHONE NUMBER”; do not use it on the “SECOND PHONE NUMBER”.

```
FIRST PHONE NUMBER:
-                        ↓
```

To disable the digital communicator, enter a single “-” for the FIRST and SECOND PHONE NUMBER by pressing the OFF key, then ‘ # ‘. Phone number may be up to 24 digits long.

Press the down arrow ( ) to advance to the FIRST ACCT NUMBER:

```
FIRST ACCT NUMBER:       0000
0-FFFF                   ↕
```

Enter the 4 digit account number and press ‘ # ‘. To enter the digits B-F, first press the OFF key, then press the 1-5 key respectively (i.e. 1B11 = 1 OFF 1 1 1 #).

SECOND PHONE NUMBER, SECOND ACCOUNT NUMBER

Enter these if used.

Note: do not use the call waiting sequence on the “SECOND PHONE NUMBER”.

```
SECOND PHONE NUMBER:
-                        ↕

SECOND ACCT NUMBER: 0000
0-9999                   ↕
```

TWO-WAY AUDIO

If a Two-Way Audio Module is being used, this item enables hands free audio communication between your customer’s premises and the central station.

After the transmission of the alarm to the central station, the operator can talk and listen to people and sounds at the premises.

```
TWO-WAY AUDIO:           0
0=NO 1=YES               ↕
```

If a Two-Way Audio Module is part of the system, select the 1 (YES) key to enable this feature.

WEB VERSION

REPORT OPEN/CLOSE

The communicator can be setup to send an opening and a closing report by user code. Whenever the system is disarmed the communicator will send an opening report to the central station. When the system is armed, the communicator will send a closing report to the central station.

```
REPORT OPEN/CLOSE:       0
0=NO 1=YES               ↕
```

To enable the communicator to send opening and closing reports to the central station, select the 1 (YES) key.

REPORT BYPASS / RESTORE

This item is used to enable/disable reporting to the central station when a zone is bypassed or restored when using Contact ID.

The communicator can be configured to send bypass/restore signals to the central station when using Contact ID. Whenever a zone is bypassed, the communicator will send a zone bypassed report to the central station. When a zone is restored, the communicator will send a zone restored report to the central station.

```
REPORT BYPASS/REST:      1
0=NO 1=YES               ↕
```

To disable the communicator from sending bypass and restore reports to the central station, select the 0 (NO) key.

AC FAIL REPORT TIME

The AC Fail Report Time is used to suspend the “AC Power Off” trouble report to the central station, until the power has been off for the specified amount of time. This is used to prevent the *Omni* Pro II from calling and reporting of AC power failures when there are numerous AC power interruptions at the premises. An “AC Power Off” trouble is not generated until power has been off for 3 minutes. The AC Fail Report Time begins after the trouble has been generated (i.e. 3 minutes after the AC power goes off) and is reset every time power is restored.

```
AC FAIL REPORT TIME:     60
0-60 MIN                 ↕
```

The AC Fail Report Time can be set from 1 to 60 minutes.

AUTOMATIC TEST TIME

The communicator CAN be setup to automatically send a test code to the central station on a periodic basis. AUTOMATIC TEST TIME is used to set the time and days of the week of the test, and the TEST CODE specifies the code that will be transmitted for the test.

```
AUTOMATIC TEST TIME:
 -- NEVER          #=CHNG↕
```

To disable the automatic test, press the ‘ # ‘ key and then 0 for Never, and ‘ # ‘.

WEB VERSION

SETUP AREAS

To configure the system for multiple areas, from the Installer Setup menu, press the 4 (AREA) key. The number of areas must be specified. Also, consoles, zones, units, thermostats, and buttons must be assigned to areas. By default, the system is setup for one area.

The display prompts for the number of areas that will be used:

```
NUMBER OF AREAS:         1
1-8
```

If you choose 2-8, the Setup Areas menu is displayed:

```
SETUP AREAS
1=CTRL 2=ZONES 3=BTTN    ↓

4=CONS 5=TEMP 8=MSG      ↑
```

SETUP AREAS: CONTROL

To assign control units to specific areas, from the Setup Areas menu, press the 1 (CTRL) key.

Units can be setup so that they can be activated from specific areas or from all areas.

Units for an entire X-10 House Code (groups of 16 unit numbers) can be assigned to specific areas. Units 257-384 (Expansion Enclosure voltage outputs) can be assigned to specific areas in groups of eight. Units 385-392 (controller voltage outputs) may be assigned individually to specified areas. Units 393-511 (flags) can be assigned to specific areas in groups of eight.

SETUP AREAS: ZONES

To assign zones to areas, from the Setup Areas menu, press 2 (ZONE). Each zone must be assigned to one and only one area.

```
ZONE 1 AREA:             1
1-8                      ↓
```

THROUGH

```
ZONE 176 AREA            1
1-8                      ↑
```

SETUP AREAS: BUTTONS

To assign groups of macro buttons to specific areas, from the Setup Areas menu, press the 3 (BTTN) key.

Buttons can be configured so that they can only be activated from a particular area or from any area. Buttons are assigned to areas in groups of eight.

WEB VERSION

SETUP AREAS: CONSOLES

To assign a console to an area, from the Setup Areas menu, press the 4 (CONS) key.

Each console must be assigned to one and only one area. A console may be set to global, which allows it to access areas other than its assigned area through security arming and the "go to" function.

```
CONSOLE 1 AREA:          1
1-8                      ↓

CONSOLE 1 GLOBAL:        1
0=NO 1=YES               ↕
```

THROUGH

```
CONSOLE 16 AREA:         1
1-8                      ↕

CONSOLE 16 GLOBAL:       1
0=NO 1=YES               ↑
```

SET-UP AREAS: THERMOSTATS

To assign thermostats to specific areas, from the Set-up Areas menu, press the 5 (TEMP) key.

Thermostats can be set up so that they can only be controlled from a specific area or from all areas. PESMs and Temperature Sensors can only be controlled from a single area, as specified in SETUP AREAS.

```
THERMOSTAT 1 AREAS:
1 2 3 4 5 6 7 8 0=CLR    ↓
```

THROUGH

```
THERMOSTAT 64 AREAS:
1 2 3 4 5 6 7 8 0=CLR    ↑
```

SETUP AREAS: MESSAGES

To assign messages to specific areas, from the Setup Areas menu, press the 8 (MSG) key.

Messages can be setup so that they can be displayed in a specific area or in all areas. Messages are assigned to areas in groups of eight.

WEB VERSION

SETUP TEMPERATURES

From the Installer Setup Menu, press the 5 (Temp) key to configure temperature options, enable and configure thermostats, and to assign Node IDs for each *Z-Wave* Thermostat.

TEMPERATURE DISPLAY

This allows you to choose between Fahrenheit and Celsius temperature format.

```
TEMPERATURE DISPLAY:     1
1=FAHRENHEIT 2=CELSIUS   ↓
```

THERMOSTAT TYPE

If *Leviton* thermostats are part of the system, this item specifies the thermostat type for each thermostat (this enables the thermostat). If thermostats are used, they must be configured to the applicable thermostat type. When any THERMOSTAT TYPE is changed from the default setting of "Not Used", Zone 16 and Output 8 is automatically configured for thermostats.
There is no need to change the ZONE TYPE for Zone 16 or OUTPUT TYPE for Output 8.

For thermostat types, the current setting is shown on the bottom line.

```
THERMOSTAT 1 TYPE:       0
NOT USED #=CHNG          ↕
```

THROUGH

```
THERMOSTAT 64 TYPE:      0
NOT USED #=CHNG          ↑
```

To enable or change a thermostat type, press the ' # ' key. Use the arrow keys to scroll through the list of thermostat types, then press ' # ' to select a new type. The display shows:

```
SELECT TYPE:             1
AUTO HEAT/COOL           ↓
```

TYPE	NUMBER	DESCRIPTION
AUTO HEAT/COOL	1	Automatic changeover heat and cool thermostat
HEAT/COOL	2	Manual changeover heat and cool thermostat
HEAT ONLY	3	Heating only thermostat
COOL ONLY	4	Cooling only thermostat
SETPOINT ONLY	5	Setpoint only thermostat

Z-WAVE THERMOSTAT NODE ID

If *Z-Wave* Thermostats are part of the system, the Node ID for the thermostat must be associated (mapped) with the specified thermostat address in the *Omni* Pro II controller.

```
TSTAT 1 NODE ID:         0
0-232                    ↕
```

THROUGH

```
TSTAT 64 NODE ID:        0
0-232                    ↑
```

Enter the Node ID (0-232) for each *Z-Wave* thermostat followed by the ' # ' key.

Enter 0 if there is no node associated to the specified thermostat.

WEB VERSION

SETUP MISCELLANEOUS

To configure the Miscellaneous Installer Setup items, from the Installer Setup menu, press the 6 (MISC) key.

INSTALLER CODE

The Installer Code allows the installer access to the Installer Setup menu. The Installer Code should be changed and not given to the customer. The Installer code cannot be used for remote access.

```
INSTALLER CODE:
ENABLED #=DISABLED      ↓
```

The default setting for the Installer Code is 1111.

To change the code, first disable the existing code by pressing the ‘ # ‘ key. After disabling the code, you may enter a new code by entering a four-digit number, and then pressing the ‘ # ‘ key.

NOTE:

Remember this Installer code and do not disable. There is no way to reset or retrieve the code!

ENABLE F/W UPDATE (INSTALLER)

The Enable F/W Update option allows users with a Level 3 code to enable firmware updates for users with a Level 4 code if a user with a Level 2 code has also enabled firmware updates. When set to “Yes” and a Level 2 user has also enabled firmware updates, users with a Level 4 code will have access to update the firmware in the controller. Users with a Level 2 or Level 3 code may revoke firmware update access to users with a Level 4 code at any time by setting the Enable F/W Update option to “No”.

```
ENABLE F/W UPDATE:      0
0=NO 1=YES              ↕
```

Factory default is No. After a firmware update, this option automatically gets reset to No.

PC ACCESS CODE

This code allows the installer to access the system remotely with a PC when a user with a Level 2 code enables access for the installer with a Level 3 code by setting the Enable Installer option to “Yes”. The PC Access can also be used to arm and disarm the system remotely. The PC Access code is NOT programmed from the factory. To use it, it must be added.

NOTE: If an installer alarm reset is required after a confirmed alarm, remotely arming/disarming the system with PC Access will restore the alarm system.

```
PC ACCESS CODE:
0000-9999               ↕
```

CALL BACK PHONE NUMBER

In response to a request for remote PC ACCESS using the PC ACCESS code, the system will hang up and dial this number back immediately. To program the CALLBACK PHONE NUMBER, enter the number then press ‘ # ‘. To remove the CALLBACK PHONE NUMBER, press the OFF key to enter a single “-”, then press ‘ # ‘.

```
CALL BACK PHONE NUMBER: -
                        ↕
```


WEB VERSION

OUTSIDE SIREN DELAY

If an output is configured as an "Exterior Sounder", when the alarm is "tripped", the interior sounder is turned on first. After the OUTSIDE SIREN DELAY, the outside sounder is turned on.

This feature helps reduce annoying false alarms by signaling inside the premises first. The outside siren delay is set to 15 seconds at the factory. You may change it to any value from 0 to 60 seconds. If you want the outside sounder to turn on immediately when the alarm is activated, set the delay to 0. We recommend a minimum time of 15 seconds.

```
DIAL OUT DELAY:          15
0-60 SECONDS             ↕
```

DIAL OUT DELAY

The DIAL OUT DELAY is the number of seconds that the *Omni* Pro II waits before making an emergency dial out, AFTER the alarm is "tripped" (activated by burglar or fire) to preclude an accidental activation of the alarm from calling in a false alarm. This delay is set at the factory to 30 seconds.

Note: The DIAL OUT DELAY may be disabled for each individual zone (**See** – Zone Options).

```
DIAL OUT DELAY:          30
15-45 SECONDS            ↕
```

SIREN RESET TIME

The Siren Reset Time is the time it takes before the sirens are turned off after the alarm is tripped and if the alarm system has not been disarmed.

```
SIREN RESET TIME:        6
2-15 MINUTES             ↕
```

To change the siren reset time, enter a new time between 2-15 minutes, then press the ' # ' key. The default setting is 6 minutes.

ALARM RESET TIME

The Alarm Reset Time (confirmation window) is the number of minutes in which a second alarm must trip to generate a confirmed alarm.

```
ALARM RESET TIME:        30
30-60 MINUTES            ↕
```

To change the alarm reset time, enter a new time between 30-60 minutes, then press the ' # ' key. The default setting is 30 minutes.

ALARM RESTORE LEVEL

The Alarm Restore Level selects how an alarm is restored after a confirmed alarm. After a confirmed alarm, the system cannot be rearmed until the alarm has been restored.

If Alarm Restore Level is set to "User", a user with a Level 2 code simply has to disarm the alarm system to restore the alarm.

If the Alarm Restore Level is set to "Installer", a user with a Level 3 code must access the alerts display locally or arm/disarm the system remotely using PC Access to restore the alarm.

```
ALARM RESTORE LEVEL:     30
0=USER 1= INSTALLER      ↕
```

The default setting is "User".

WEB VERSION

FIRE ALARM VERIFICATION

This unit is equipped with a FIRE ALARM VERIFICATION feature. When enabled, if a zone configured as a FIRE (Type 32) or a GAS (Type 34) is activated, the system will cycle SWITCH 12V and Switched Power Outputs off for 10 seconds. The SWITCH 12V power output will then be restored, and 5 seconds later, the zones will be monitored again. If the zone is activated again within a 2-minute window, the fire alarm will be activated. If not, no fire alarm will be indicated.

```
VERIFY FIRE ALARMS:      0
0=NO 1=YES               ↕
```

This feature is turned OFF by factory default.

If VERIFY FIRE ALARMS is turned ON:

1) **Any** device (other than FIRE or GAS) connected to a SWITCH 12V Output (i.e. Glassbreak Detectors), must be connected to a zone configured as a LATCHING ZONE TYPE.

WARNING

This unit includes an alarm verification feature that will result in a delay of the system fire alarm signal from the initiating circuit. The total delay (*Omni* Pro II controller plus detector delay) shall not exceed 60 seconds. No other initiating devices shall be connected to these circuits unless approved by the local authority having jurisdiction.

```
Zone       Control      Detector            Total Delay
Circuit    Unit Delay   Model/Delay

________ : 10 seconds + _______________ = __________________

________ : 10 seconds + _______________ = __________________

________ : 10 seconds + _______________ = __________________

________ : 10 seconds + _______________ = __________________
```

SUPERVISE INT SNDR

This enables or disables supervision of the Interior Horn Output, which monitors the wiring to the connected sirens. Factory default is No.

```
SUPERVISE INT SNDR:      0
0=NO 1=YES               ↕
```

SUPERVISE EXT SNDR

This enables or disables supervision of the Exterior Horn Output, which monitors the wiring to the connected sirens. Factory default is No.

```
SUPERVISE EXT SNDR:      0
0=NO 1=YES               ↕
```

ENABLE EMERGENCY KEYS

This enables or disables the functionality of the emergency keys on the console keypad. Select the 1 (YES) key to enable the emergency keys. Select the 2 (NO) key to disable the emergency keys. Factory default is disabled.

```
ENABLE EMERG KEYS:       0
0=NO 1=YES               ↕
```

This item must be disabled in PD6662 installations.

WEB VERSION

DURESS CODE

A Duress Code can be added so that a user can initiate a silent dial out if they are forced to disarm the alarm system against their will. When a Duress Code is used, the alarm system will disarm normally, no sirens will sound, no lights will flash, but the *Omni* Pro II will perform a silent dial out and report that a silent alarm occurred. By default, the Duress Code is disabled.

```
DURESS CODE:
0000-9999                ↕
```

TIME DISPLAY

This allows you to choose between AM/PM and 24-HOUR time format.

```
TIME DISPLAY:            1
1=AM/PM 2=24HR           ↕
```

DATE DISPLAY

This allows you to choose between MONTH/DAY and DAY/MONTH date format.

```
DATE DISPLAY:            1
1=MMDD 2=DDMM            ↕
```

AC POWER FREQUENCY

Set this to the appropriate AC Powerline Frequency.

```
AC POWER FREQUENCY:      1
1=60HZ 2=50HZ            ↕
```

DEAD LINE DETECT

NOTE: To disable *Omni* Pro II from detecting a dead line, set this item to ‘0’; otherwise adjust only under direction of *Leviton*.

This item adjusts the threshold that is used to determine when the phone line goes dead.

```
DEAD LINE DETECT:        8
0-15 0=DISABLE           ↕
```

OFF HOOK DETECT

NOTE: Adjust only under direction of *Leviton*.

This item adjusts the threshold that is used to determine when the phone line is going off hook.

```
OFF HOOK DETECT:         69
20-250                   ↕
```

PICKUP AFTER HANGUP

This item is used to disable *Omni* Pro II from picking up the phone line after the called party hangs up the line.

```
PICKUP AFTER HANGUP:     1
0=NO 1=YES               ↕
```

Currently, after the called party or the called party’s answering machine hangs up the phone line, *Omni* Pro II picks up the line and makes its “Beep”. If you wish to turn the Pickup After Hangup OFF, press 0 then ‘ # ‘. To turn it back On, press 1 then ‘ # ‘.

The default setting for Pickup After Hangup is Yes.

WEB VERSION

CLOCK ADJUSTMENT

If the clock on an *Omni* Pro II is running faster or slower than the actual time, you can have the *Omni* Pro II automatically compensate up to 29 seconds per day. The *Omni* Pro II will add or subtract the selected amount of time daily.

```
CLOCK ADJUSTMENT:        30
1-59=-29 TO +29 SEC/DAY  ↕
```

Enter 1-29 to subtract 1-29 seconds. Enter 31-59 to add 1-29 seconds. Enter 30 for no adjustment to the clock.

The default setting is 30.

RESET SYSTEM EEPROM

Select the 1 (YES) key to reset the EEPROM. All programs, names, and setup items will be reset. All system RAM will also be initialized and the system will restart. This option, if effect, allows the system to be restored to factory fresh configuration.

```
RESET SYSTEM EEPROM?     0
0=NO 1=YES               ↕
```

RESET SYSTEM RAM

Select the 1 (YES) key to cause all of the system RAM to be reinitialized. The time, date, and event log will be cleared. Other volatile memory locations will also be reinitialized. The system RAM should only be reset if the system is acting strangely and memory corruption is suspected. Resetting the system RAM will not reset any setup items stored in EEPROM.

```
RESET SYSTEM RAM?        0
0=NO 1=YES               ↕
```

ETHERNET MAC ADDRESS

The Ethernet MAC Address, short for Media Access Control address, is the hardware address that uniquely identifies *Omni* Pro II when connected to a network.

```
ETHERNET MAC ADDRESS
FF-FF-FF-FF-FF-FF        ↑
```


WEB VERSION

SETUP EXPANSION

To configure each Expansion Module that is installed on the system, from the Installer Setup menu, press the 7 (EXP) key.

Expansion Modules include Hardwire Zone Expanders, ALC Interface Modules, and Serial Interface Modules.

MODULE 1 TYPE

The Module Type defines the function of each expansion module on the controller. Module 1 is the module with the "ADDR" jumper set to 1. Set the module type from the list below. Press ' # ' to change the module type, then use the arrow keys to select the proper module type, then press ' # ' to enter.

```
MODULE 1 TYPE              1
NOT USED          #=CHNG ↓
```

For example, when configuring the module for a Hardwire Expander and if the jumper on the Hardwire Expander is set to 1, set "Module 1" Type to "1" (HARDWIRE EXPNDR).

MODULE TYPES	NUMBER	DESCRIPTION
NOT USED	0	No module is installed
HARDWIRE EXPNDR	1	Model 10A06 Hardwire Expander installed
ALC	2	ALC Interface Module is installed
OMNI-LINK	3	Model 10A17 Serial Interface using the Omni-Link protocol
PRO-LINK	4	Model 10A17 Serial Interface using the Pro-Link protocol
UPB	5	Model 10A17 Serial Interface using the *UPB* protocol
RADIO RA	6	Model 10A17 Serial Interface using the RadioRA® protocol
NUVO CONCERTO	7	Model 10A17 Serial Interface using the NuVo® Concerto protocol
CENTRALITE	9	Model 10A17 Serial Interface using the CentraLite® protocol
VIZIA RF Z-WAVE	10	Model 10A17 Serial Interface using the *Z-Wave* protocol
LEVITON HI-FI	11	Model 10A17 Serial Interface using the *Leviton Hi-Fi* protocol
NUVO ESSENTIA/SIMPLESE	13	Model 10A17 Serial Interface using the *NuVo* Essentia/Simplese protocol
XANTECH	14	Model 10A17 Serial Interface using the Xantech® protocol
ACCESS CONTROL	18	Model 10A17 Serial Interface using the *Leviton* Access Control protocol
HOMEWORKS	20	Model 10A17 Serial Interface using the Lutron® HomeWorks® protocol
CLIPSAL C-BUS	21	Model 10A17 Serial Interface using the Clipsal B-Bus protocol
DYNALITE	22	Model 10A17 Serial Interface using the Dynalite® protocol
RADIO RA 2	23	Model 10A17 Serial Interface using the *RadioRA* 2 protocol
CARRIER/BRYANT	25	Model 10A17 Serial Interface using the Carrier/Bryant protocol
LEVITON HI-FI 2	26	Model 10A17 Serial Interface using the *Leviton Hi-Fi* 2 protocol
COOLMASTER	28	Model 10A17 Serial Interface using the Coolmaster protocol
KNX	29	Model 10A17 Serial Interface using the KNX Gateway protocol
LUMA-NET	30	Model 10A17 Serial Interface using the Luma-Net protocol
SOMFY URTSI	32	Model 10A17 Serial Interface using the Somfy® URTSI protocol

Notes:

1. Only 2 Model 10A06 Hardwire Expander Modules can be installed.
2. Only 2 ALC Interface Modules can be installed.
3. Only 1 Serial Interface Module can be installed.
4. The NuVo Grand Concerto, Speakercraft, or Proficient audio system can not be connected to the *Leviton* Model 10A17 Serial Interface Module. It must be connected to the (J2 Serial - J5 Serial) built-in serial port on the *Omni* Pro II controller.

MODULE 2 TYPE - MODULE 4 TYPE

Module 2 is the module with the jumper set to 2, and so on. Set each module type from the list of "Module Types".

WEB VERSION

SERIAL 1 RATE

"Serial 1 Rate" selects the baud rate used for the first built-in serial interface (J1 Serial) on the *Omni* Pro II controller. Select the baud rate for the first built-in serial interface from the list. Use the arrow keys to select the baud rate then press the ' # ' key.

BAUD RATE	NUMBER	
75 baud	1	
150 baud	2	
300 baud	3	
600 baud	4	
1200 baud	5	
2400 baud	6	
4800 baud	7	
9600 baud	8	(default)

SERIAL 1 FUNCTION

The "Serial 1 Function" selects the communication protocol used for the first built-in serial interface (J1 Serial) on the *Omni* Pro II controller. Select the function for the first built-in serial interface from the list. Use the arrow keys to select the function then press the ' # ' key.

FUNCTION TYPES	NUMBER	DESCRIPTION
OMNI-LINK	3	Serial communication using the Omni-Link protocol
PRO-LINK	4	Serial communication using the Pro-Link protocol
UPB	5	Serial communication using the *UPB* protocol
RADIO RA	6	Serial communication using the *RadioRA* protocol
NUVO CONCERTO	7	Serial communication using the *NuVo* Concerto protocol
RUSSOUND	8	Serial communication using the Russound® protocol
CENTRALITE	9	Serial communication using the CentraLite® protocol
VIZIA RF Z-WAVE	10	Serial communication using the *Z-Wave* protocol
LEVITON HI-FI	11	Serial communication using the *Leviton Hi-Fi* protocol
NUVO GC/ESSEN G	12	Serial communication using the *NuVo* Grand Concerto/Essentia protocol
NUVO ESSENTIA/SIMPLESE	13	Serial communication using the *NuVo* Essentia/Simplese protocol
XANTECH	14	Serial communication using the *Xantech* protocol
SPEAKERCRAFT	15	Serial communication using the Speakercraft protocol
PROFICIENT	16	Serial communication using the Proficient protocol
ACCESS CONTROL	18	Serial communication using the *Leviton* Access Control protocol RUSS
E/C-SERIES	19	Serial communication using the *Russound* E/C Series protocol
HOMEWORKS	20	Serial communication using the *Lutron HomeWorks* protocol
CLIPSAL C-BUS	21	Serial communication using the Clipsal B-Bus protocol
DYNALITE	22	Serial communication using the *Dynalite* protocol
RADIO RA 2	23	Serial communication using the *RadioRA* 2 protocol
SOMFY SDN	24	Serial communication using the *Somfy* SDN protocol
CARRIER/BRYANT	25	Serial communication using the *Carrier/Bryant* protocol
LEVITON HI-FI 2	26	Serial communication using the *Leviton Hi-Fi* 2 protocol
ZIGBEE	27	Serial communication using the ZigBee® protocol
COOLMASTER	28	Serial communication using the Coolmaster protocol
KNX	29	Serial communication using the KNX Gateway protocol
LUMA-NET	30	Serial communication using the *Leviton* Luma-Net protocol
EMAIL	31	Serial communication using the *Omni* Notifier protocol
SOMFY URTSI	32	Serial communication using the *Somfy* URTSI protocol

Note:

The NuVo Grand Concerto, Speakercraft, and Proficient audio systems and Access Control cannot be connected to the first built-in serial port (J1 Serial) on the *Omni* Pro II controller. It must be connected to the (J2 Serial - J5 Serial) built-in serial port on the *Omni* Pro II controller.

WEB VERSION

SERIAL 2 - SERIAL 5 RATE

"Serial 2 Rate" - "Serial 5 Rate" selects the baud rate used for the second, third, fourth, and fifth built-in serial interface ports (J2 Serial - J5 Serial, respectively) on the *Omni* Pro II controller. Select the baud rate for the built-in serial interface from the list.

SERIAL 2 - SERIAL 5 FUNCTION

"Serial 2 Function" through "Serial 5 Function" selects the communication protocol used for each of the respective the built-in serial interface ports (J2 Serial and J5 Serial, respectively) on the *Omni* Pro II controller. Select the function for the built-in serial interface from the list.

Notes about audio distribution systems:

1. *Omni* Pro II only supports communications with one audio distribution system: *Leviton Hi-Fi*, NuVo Concerto, NuVo Grand Concerto, NuVo Essentia/Simplese, Russound, Xantech, Speakercraft, or Proficient. Do not configure more than one audio protocol.

2. When connecting the Speakercraft audio system to the *Omni* Pro II:

   a. The Speakercraft RSA 1.0 MZC Control Interface Module must be used.
   b. Use the *Leviton* Model 21A05-2 Serial PC Cable for making the connection.
   c. In order for the key presses to perform the correct operation, an MKP keypad must be assigned to address zero in each zone.

3. When connecting the Proficient audio system to the *Omni* Pro II:

   a. Use the *Leviton* Model 21A05-2 Serial PC Cable for making the connection.
   b. In order for the key presses to perform the correct operation, a PMK keypad must be assigned to address zero in each zone.

4. When connecting the NuVo Concerto, NuVo Essentia, NuVo Simplese, Russound CAV or CAM, or Xantech MRC-88 audio system to the *Omni* Pro II, use the *Leviton* Model 36A05-4 Serial Connectivity Cable for making the connection.

5. When connecting the NuVo Grand Concerto audio system to the *Omni* Pro II, an RS-232 Line Booster or Optical Isolator must be used. See the following Knowledge Base article for additional information and wiring diagram:

   http://kb.homeauto.com/default.asp?id=849&SID=&Lang=1.

6. When connecting the Speakercraft audio system, the RSA 1.0 MZC Control Interface Module must be used.

7. When connecting the Proficient audio system, the Proficient Control Module (PCM) must be used.

SERIAL 6 RATE

"Serial 6 Rate" selects the baud rate used when a Serial Interface Module is added to the *Omni* Pro II system. If a Serial Interface Module is installed, select its baud rate then press the ' # ' key.

WEB VERSION

SETUP ZONE OPTIONS

Zone options are parameters that define the way that a zone functions. There are global zone options that affect all zones and there are individual zone options that affect how each individual zone functions.

To configure zone options, from the Installer Setup menu, press the 8 (ZOPT) key.

SWINGER SHUTDOWN NUMBER

Swinger Shutdown is a false alarm prevention feature that counts the number of alarms caused by a specific zone. After a certain number of alarms caused by the same zone within the same arming period, the controller will then shutdown that zone for the remainder of that arming period.

The "Swinger Shutdown Number" is the number of times that a zone may cause an alarm during the same arming period before it is shutdown.

```
SWINGER SHUTDOWN NUM:    1
1-2                      ↓
```

When enabled, if the Swinger Shutdown zone is violated (causes an alarm) 1 or 2 times (according to the "Swinger Shutdown Number") within the same arming period, the controller will then shutdown and ignore that zone for the remainder of that arming period. The default setting is 1.

CROSS ZONE WINDOW

Cross Zoning is a feature that enforces redundant detection of devices such that two or more zones must trip within a defined period to cause an alarm. This feature is typically used when multiple devices are used to cover the same general area.

The "Cross Zone Number" is the number of seconds in which a second zone must trip after a zone configured as "Cross Zoning" has been tripped in order to cause an alarm.

```
CROSS ZONE NUMBER:       60
15-240 SECONDS           ↕
```

The default setting is 60 seconds.

ENTRY/EXIT FOLLOWER

Zones that are in the entry path (e.g. between the entry door and the console), must be configured as an Entry/Exit Follower. Zones that are defined as Entry/Exit Followers will not trigger an alarm when violated during the entry delay when an Entry/Exit zone is violated first. Zones that are not part of the entry path should be set to Disabled.

The default for all zones is set to Enabled.

ZONE 1 OPTIONS – ZONE 176 OPTIONS

Each zone has individual zone options that may be configured for Cross Zoning, Swinger Shutdown, and Dial Out Delay.

```
ZONE 1 OPTIONS:          4
0-7                      ↕
THROUGH

ZONE 176 OPTIONS:        4
0-7                      ↑
```


WEB VERSION

Enter a single value to configure the individual zone options for each zone according to the table below:

Zone Options Table																
Zone Options Value	**0**	**1**	**2**	**3**	**4**	**5**	**6**	**7**	**8**	**9**	**10**	**11**	**12**	**13**	**14**	**15**
Cross Zoning	No	Yes	No	Yes	No	Yes	No	Yes	No	Yes	No	Yes	No	Yes	No	Yes
Swinger Shutdown	No	No	Yes	Yes	No	No	Yes	Yes	No	No	Yes	Yes	No	No	Yes	Yes
Dial Out Delay	No	No	No	No	Yes	Yes	Yes	Yes	No	No	No	No	Yes	Yes	Yes	Yes
Entry/Exit Follower	No	No	No	No	No	No	No	No	Yes	Yes	Yes	Yes	Yes	Yes	Yes	Yes

The default value for Zone 1 Options – Zone 176 Options is 12. **See** the highlighted area of Zone Options Table.

OMNI PRO II SPECIFICATIONS

Size: Controller: 13 W x 13 H x 4.5 D
Console: 4.6 W x 4.5 H x 1.2 D

Weight: Controller: approx. 10 lb.
Console: approx. 0.5 lb.

Operating 14 - 122 degrees F (-10 - 50 degrees C)
Ranges: 10 - 95 % relative humidity, non-condensing

Required Transformer: 24 VAC, 1.67 Amps, 40 VA

Power Supply: Type A, 24 VAC +/-10%, 50/60 Hz

Power Supply Output: 13.7 VDC @ 2.89 A

Controller Power Requirement: 2.6 Watts

Outlet Power: 3 Amps

Battery: Rechargeable Lead-Acid, 12 volts, 7 Amp-hour

Battery Voltage Fault: 11.6 VDC

Power Output Fault: 11.6 VDC

Device Fuse: Polyfuse: 1.35 A

Horns Fuse: Polyfuse: 1.35 A

Battery Fuse: Polyfuse: 4.00 A

Polyfuses are permanent fuses that do not need replacement.

Nominal Voltage: 10 - 13.7 VDC, 200 mV max. peak to peak ripple

Low Voltage Cut Out: 9 VDC

Over-Voltage Protection: 16.7 VDC

WEB VERSION

Typical Current Consumption at Nominal Voltage:

Controller: 135 mA (alarm and non-alarm)
Console: backlight off (non-alarm) - 35 mA; backlight on (alarm) - 100 mA 16
Zone Hardwire Expander Module: 40mA (alarm and non-alarm)

Controller Maximum Group Current Outputs:

Devices: AUX 12 VDC, SWITCH 12 VDC, CONSOLE, and OUTPUTS 1 - 8: 1 A

Horn: INT HORN and EXT HORN: 1 A

Controller Maximum Individual Current Outputs:

Devices: **(Do not exceed 1 A total)**

AUX 12 VDC	1 A
SWITCH 12 VDC	1 A
CONSOLE	1 A
OUTPUTS 1 - 8	100 mA

For 24-Hour Battery Standby Time, the following must be observed: (See Figure 18)

Controller Maximum Group Current Outputs:

Devices: AUX 12 VDC, SWITCH 12 VDC, CONSOLE, and OUTPUTS 1 - 8: 250mA

Horn: INT HORN and EXT HORN: 300mA

Alarm Codes: 4 digits, 10,000 combinations (0000-9999)

Level 2 Codes: 99
Level 3 Codes: 2
Level 4 Codes: 1

WEB VERSION

24-HOUR STANDBY BATTERY CAPACITY

Maximum current ratings for 24-hours:

Aux 12 VDC, Switch 12 VDC, Console, and Outputs 1-8: 250 mA

Interior Horn and Exterior Horn: 350 mA

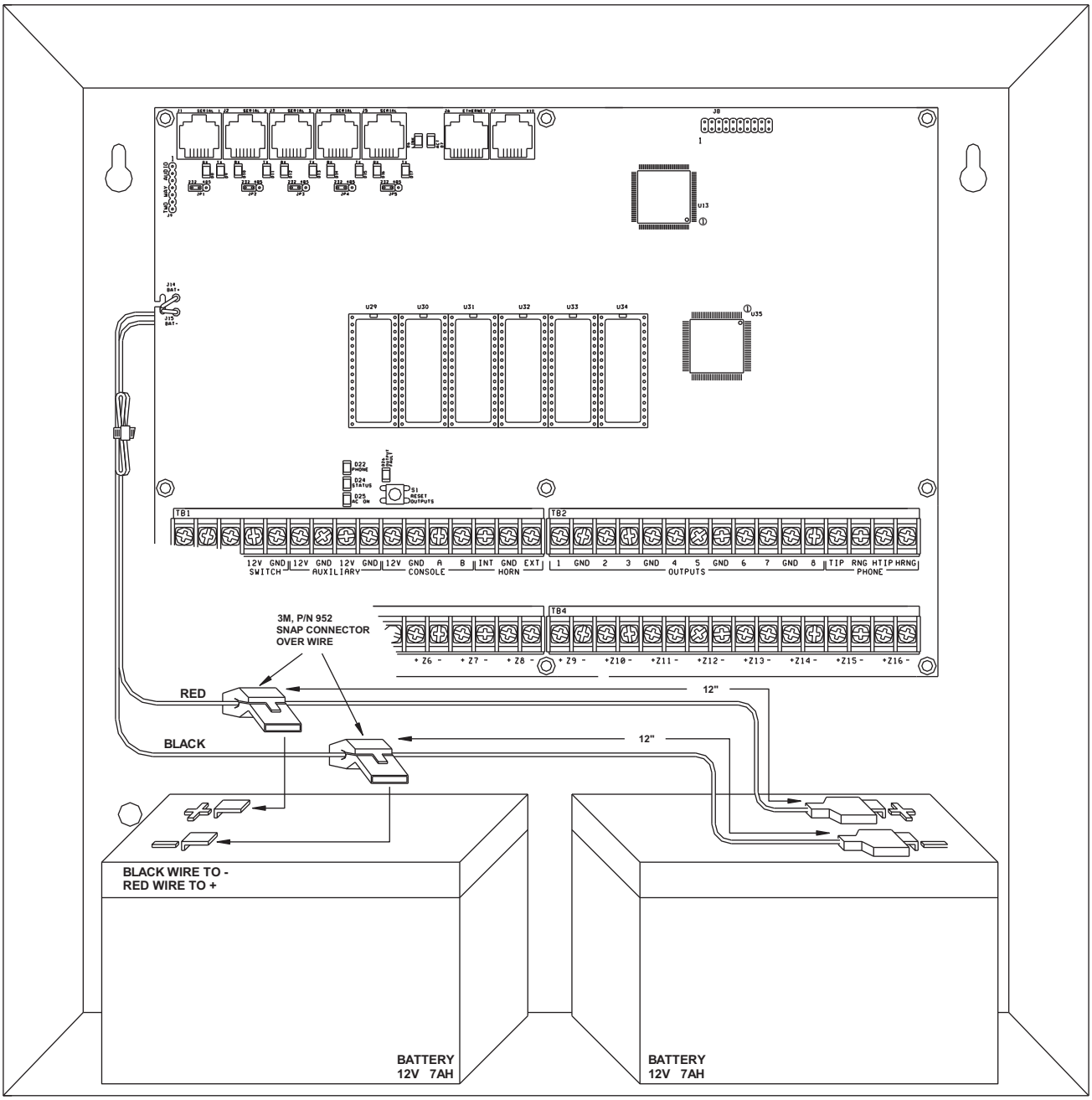

FIGURE 18 - 24-HOUR STANDBY CONNECTIONS

WEB VERSION

SMOKE DETECTOR INSTALLATION GUIDELINES

1. Ceiling mounted smoke detectors should be located in the center of the room or hall, or not less than 4 inches from any wall. When the detector is mounted on a wall, the top of the detector should be 4 to 12 inches from the ceiling.

2. Do not install smoke detectors where normal ambient temperatures are above 100 deg. F (37.8 deg. C) or below 40 deg. F (4 deg. C). Also, do not locate the detector in front of air conditioners, heating registers, or other locations where normal air circulation will keep smoke form entering the detector.

3. Additional information on Household Fire Warning is available at nominal cost from: The National Fire Protection Association, Battery March Park, Quincy, MA. 02269. Request Standard No. NFPA 72. Contact your home Insurance Company for a possible reduction of your insurance premium.

4. A smoke detector should be located between the sleeping area and the rest of the family living unit.

5. In family living units with more than one sleeping area, a smoke detector should be provided to protect each sleeping area.

6. A smoke detector should be located on each story (Refer to the diagrams below).

7. For complete details on proper location and installation of smoke detectors, refer to the instructions supplied with the smoke detector.

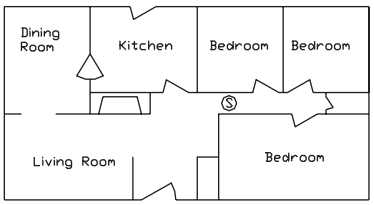

(a) A smoke detector should be located between the sleeping area and the rest of the family living unit.

(b) Where to Locate the Required Smoke Detectors in New Construction. All of the smoke detectors specified in (a) for existing construction are required, and, in addition, a smoke detector is required in each bedroom.

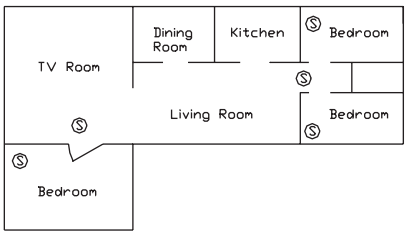

(b) In family living units with more than one sleeping area, a smoke detector should be provided to protect each sleeping area in addition to detectors required in bedrooms.

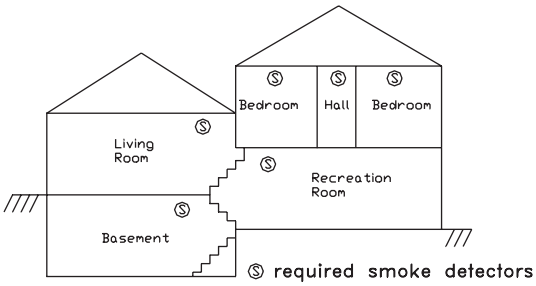

Split level arrangment. Smoke detectors are required where shown. Smoke detectors are optional if door is not provided between living and recreation rooms.

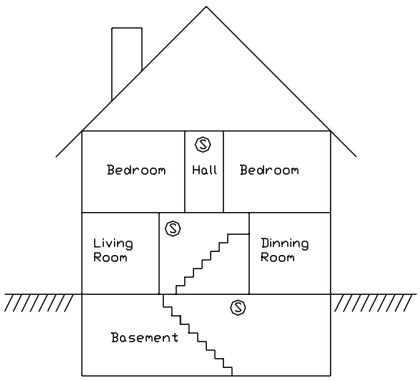

A smoke detector should be located on each story.

WEB VERSION

APPENDIX A – CONTACT ID REPORTING FORMAT

ZONE TYPE	TRIP	TROUBLE	DESCRIPTION
Entry/exit	134	370	Entry/exit burglary
Perimeter (also Latching)	131	370	Perimeter burglary
Night Interior (also Latching)	132	370	Interior burglary
Away Interior (also Latching)	132	370	Interior burglary
Panic	120	375	Panic alarm
Police Emergency	120	375	Panic alarm
Silent Duress	122	375	Silent panic
Tamper (also Latching)	137	370	Tamper burglary
Fire	110	373	Fire alarm
Fire Emergency	110	373	Fire alarm
Gas	151	373	Gas alarm
Auxiliary Emergency	150	370	24 hour non-burglary
Trouble	330	330	System peripheral trouble
Freeze	159	370	Low temperature alarm
Water	154	370	Water leakage
Auxiliary	none	370	Auxiliary trouble
Fire tamper	321	321	Bell/siren #1 trouble
Temperature Alarm	152	370	Refrigeration alarm
Expansion Tamper	None	341	Expansion Module Tamper Trouble

EVENT	CODE	DESCRIPTION
Zone bypass/restore	570	Zone bypass/restore
Fire zone bypass/restore	571	Fire bypass/restore
Automatic communicator test	602	Periodic test
Cancel	406	Cancel
User disarm/arm	401	Open/close by user
Programmed disarm/arm	403	Automatic open/close
PC Access disarm/arm	407	Remote open/close
Quick arm	408	Closing-quick arm
Keyswitch disarm/arm	409	Keyswitch open/close
Recent closing	459	Recent closing
Exit error	374	Exit error
Confirmed burglary alarm	139	Intrusion verification

SYSTEM TROUBLE	CODE	DESCRIPTION
Battery low	302	Low system battery
Fuse	312	Power supply overcurrent
AC power failure	301	AC power loss
Phone line dead	351	Phone line #1 trouble
Digital communicator	350	Communication failure
Fire tamper	321	Bell/siren #1 trouble
Sensor tamper	144	Sensor tamper

WEB VERSION

APPENDIX B - INFORMATION FOR CENTRAL STATION

Date: _____

Subscriber Name: _____
Address 1: _____
Address 2: _____
City, State, Zip: _____
Home #: _____ Work #: _____
Password: _____

Installer Name: _____
Address 1: _____
Address 2: _____
City, State, Zip: _____
Phone #: _____ Beeper #: _____

Subscriber's Notification List:

1. Name:_____
Phone #: _____
Relationship: _____

2. Name: _____
Phone #: _____
Relationship: _____

3. Name: _____
Phone #: _____
Relationship: _____

Subscriber Equipment: ***Omni* Pro II**

Notes: _____
_____
_____
_____

First Phone #: _____
First Account #: _____
Second (Backup) Phone #: _____
Second (Backup) Account #: _____

Communicator Type: Contact ID

TWO-WAY AUDIO: _____ YES _____ NO

REPORT OPEN/CLOSE: _____ YES _____ NO

24 HOUR TEST: _____ YES _____ NO TEST TIME: _____

WEB VERSION

APPENDIX C - ZONE AND UNIT MAPPING

ZONE	DEVICE
Zones 1-16	Zones 1-16 on Controller
Zones 17-32	Zones 1-16 on 1st Model 10A06 Hardwire Expander
Zones 33-48	Zones 1-16 on 2nd Model 10A06 Hardwire Expander
Zones 49-64	Zones 1-16 on 1st Model 17A00 Expansion Enclosure
Zones 65-80	Zones 1-16 on 2nd Model 17A00 Expansion Enclosure
Zones 81-96	Zones 1-16 on 3rd Model 17A00 Expansion Enclosure
Zones 97-112	Zones 1-16 on 4th Model 17A00 Expansion Enclosure
Zones 113-128	Zones 1-16 on 5th Model 17A00 Expansion Enclosure
Zones 129-144	Zones 1-16 on 6th Model 17A00 Expansion Enclosure
Zones 145-160	Zones 1-16 on 7th Model 17A00 Expansion Enclosure
Zones 161-176	Zones 1-16 on 8th Model 17A00 Expansion Enclosure

UNITS	OUTPUTS / FLAGS
Units 257-272	Outputs 1-16, 1st Model 17A00 Expansion Enclosure
Units 273-288	Outputs 1-16, 2nd Model 17A00 Expansion Enclosure
Units 289-304	Outputs 1-16, 3rd Model 17A00 Expansion Enclosure
Units 305-320	Outputs 1-16, 4th Model 17A00 Expansion Enclosure
Units 321-336	Outputs 1-16, 5th Model 17A00 Expansion Enclosure
Units 337-352	Outputs 1-16, 6th Model 17A00 Expansion Enclosure
Units 353-368	Outputs 1-16, 7th Model 17A00 Expansion Enclosure
Units 369-384	Outputs 1-16, 8th Model 17A00 Expansion Enclosure
Units 385-392	Voltage Outputs (1-8) on Controller
Units 393-511	Flags

WEB VERSION

APPENDIX D – *LEVITON* ACCESS CONTROL

Leviton Access Control allows you to access doors by opening an electric or magnetic lock, arm and disarm the security system, and achieve many home automation functions such as controlling lighting, energy management, surveillance, and audio. The Access Control Reader is a 125 KHz high security, digitally encrypted, 26-bit proximity card reader. It has durable and scratch resistant polycarbonate housing and full epoxy potting which ensures successful operation even in harsh environments. *Omni* Pro II can have up to 16 *Leviton* Access Control Readers connected.

Users can utilize either a standard credit card sized Access Control Card or the convenient Access Control Key Tag to access the system. Each card is attached to a user code in the controller which can be managed with several privileges. Users can be granted privileges based on time of day and day of week as well as any other desired events.

Reader Setup

Each Access Control Reader can easily be enrolled and configured using an *Leviton* console or PC Access software. Access Control Readers are configured and enrolled under ***Setup | Installer | Expansion***.

Enrolling Access Control Readers

When enrolling an Access Control Reader, the following configuration items are part of the enrollment process:

- Area assignment
- Link assignment (link to another Access Control Reader)
- Unlock Time
- Exit Time
- Lock Type
- Beeper (enable or disable)
- Arming and disarming

Note: These items should be configured prior to enrolling the Access Control Reader.

To enroll Access Control Readers, from the Installer Setup menu, press the 7 (EXP) key. Use the down arrow key to scroll to the "Reader Address" menu item.

```
READER 1 ADDRESS:
0.0.0.0            #=CFG ↕
```

Press the ' # ' (#=CFG) key to put the system into configuration mode. The display will show:

```
CONFIGURE READER 1
SWIPE CARD 3 TIMES
```

Go to the Access Control Reader to be enrolled and swipe any *Leviton* Access Control Card or Key Tag 3 times in front of the reader:

```
READER 1 ADDRESS:
8.5.0.137          #=DEL ↕
```

Note: you have 3 minutes to complete the operation once the system is put into configuration mode. If an *Leviton* Access Control Card or Key Tag has not been swiped 3 times within the first 3 minutes, the controller will automatically exit configuration mode.

WEB VERSION

Deleting Access Control Readers

To delete an Access Control Reader that is enrolled in the system, scroll down to the particular “Reader Address” menu item, and then press the ‘ # ‘ (#=DEL) key.

```
READER 1 ADDRESS:
8.5.0.137          #=DEL ↕
```

You will first be prompted to confirm deletion:

```
DELETE READER 1?
0=NO 1=YES
```

Deleting an Access Control Reader will take it out of the system and it will not be valid any longer.

Area Assignment

When more that one Area is configured, each Access Control Reader can be assigned to a specific Area on the controller. When used for security arming and disarming, the security mode of the Area where the Access Control Reader is assigned will be changed.

```
READER 1 AREA:            1
1-8                       ↕
```

Enter the Area for the selected Access Control Reader followed by the ‘ # ‘ key.

Link Assignment

A Link Assignment is used when two Access Control Readers are used to control access to the same door (i.e. one reader on the inside and the other on the outside of the restricted door). This is useful when an Access Control Card or Key Tag is required to enter or exit through a restricted door.

Since the door lock is physically connected to a single Access Control Reader, the Link Assignment links the selected Access Control Reader with a second Access Control Reader so that when a valid Access Control Card or Key Tag is presented at either Access Control Reader, the door is unlocked. Furthermore, the controller will log which Access Control Reader was used to access the door (i.e. whether the user was entering or exiting the door).

```
READER 1 LINKED TO:       0
0-16                      ↕
```

Enter the reader number of the Access Control Reader that will be linked to the selected reader, followed by the ‘ # ‘ key.

Notes:

- Only two Access Control Readers can be linked together.
- When a valid Access Control Card of Key Tag is presented at either linked Access Control Reader, the 9 LED indicators on both linked Access Control Readers will illuminate the color of the current security arming state for that area and will remain illuminated while the door is unlocked.

WEB VERSION

Unlock Time

The Unlock Time is the amount of time that the door remains unlocked when a valid Access Control Card or Key Tag is presented at the Access Control Reader. The Unlock Time can be between 1-60 seconds and is individually configured for each reader.

Note: When the door is unlocked due to a valid Access Control Card or Key Tag is presented, all 9 LED indicators will illuminate the color of the current security arming state for that area and will remain illuminated while the door is unlocked.

```
READER 1 UNLK TIME:      5
1-60 SECONDS             ↕
```

Enter the Unlock Time (1-60 seconds) for the selected Access Control Reader, followed by the ‘ # ‘ key. The default time is 5 seconds.

Exit Time

The Exit Time is the amount of time that the door remains unlocked when the “Request to Exit” input is tripped. An optional device, such as a “Request to Exit” button which is mounted on the inside of the restricted door, is used to unlock the door without requiring a second Access Control Reader. The Exit Time can be between 1-60 seconds and is individually configured for each reader.

Note: When the door is unlocked due to pressing a “Request to Exit” button, none of the LED indicators will illuminate.

```
READER 1 EXIT TIME:      5
1-60 SECONDS             ↕
```

Enter the Exit Time (1-60 seconds) for the selected Access Control Reader, followed by the ‘ # ‘ key. The default time is 5 seconds.

Lock Type

The Lock Type specifies the type of door lock that is connected to the selected Access Control Reader. The Lock Type can be either be configured for a “Fail Secure” device (door is locked when power fails) or “Fail Safe” mode (door is unlocked when power fails).

```
READER 1 LOCK TYPE:      0
0=SECURE 1=SAFE          ↕
```

Select 0 (Secure) when connecting a “Fail Secure” lock or select 1 (Safe) when connecting a “Fail Safe” lock, followed by the ‘ # ‘ key. The default setting is “Fail Secure”.

Reader Beeper

The Reader Beeper setting is used to enable and disable the beeper in the selected Access Control Reader. When the beeper is set to “Yes”, every time a valid Access Control Card or Key Tag is presented at the reader, the beeper will produce a single short beep. If the reader is used to arm or disarm the security system, the beeper will produce a single long beep.

When the beeper is set to “No”, the reader will not beep when a valid Access Control Card or Key Tag is presented at the reader or when the reader is used to arm or disarm the security system.

```
READER 1 BEEPER:         1
0=NO 1=YES               ↕
```

To disable the beeper, select 0 (No) followed by the ‘ # ‘ key. To enable the beeper, select 1 (Yes) followed by the ‘ # ‘ key. The default setting for the beeper is enabled (Yes).

WEB VERSION

Reader Arm/Disarm

The Reader Arm/Disarm setting is used to enable or disable the reader for arming and disarming the security system in the respective area when a valid Access Control Card or Key Tag is presented at the selected Access Control Reader 3 times, each presentation within 5 seconds of the previous presentation of the card.

When Arm/Disarm is set to “Yes”, and a valid Access Control Card or Key Tag is presented at the reader 3 times, each presentation within 5 seconds of the previous presentation of the card, the Access Control Reader will produce a single long beep and the security system will:

(a) Arm to the Away mode (in the respective area) if the security system is currently disarmed, OR
(b) Disarm the security system (in the respective area) if the security system is currently armed in any security mode

When Arm/Disarm is set to “No”, the selected Access Control Reader can not be used to arm or disarm the security system.

```
READER 1 ARM/DISARM:     1
0=NO 1=YES               ↕
```

To disable arming and disarming from the selected reader, select 0 (No) followed by the ‘ # ‘ key. To enable arming and disarming at the selected reader, select 1 (Yes) followed by the ‘ # ‘ key. The default setting for Reader Arm/Disarm is enabled (Yes).

WEB VERSION

WEB VERSION

FCC COMPLIANCE

This equipment has been tested and found to comply with the limits for a Class B digital device, pursuant to part 15 of the FCC Rules. These limits are designed to provide reasonable protection against harmful interference in a residential installation. This equipment generates, uses and can radiate radio frequency energy and, if not installed and used in accordance with the instructions, may cause harmful interference to radio communications. However, there is no guarantee that interference will not occur in a particular installation. If this equipment does cause harmful interference to radio or television reception, which can be determined by turning the equipment off and on, the user is encouraged to try to correct the interference by one or more of the following measures:

- Reorient or relocate the receiving antenna.
- Increase the separation between the equipment and receiver.
- Connect the equipment into an outlet on a circuit different from that to which the receiver is connected.
- Consult the dealer or an experienced radio/TV technician for help.

FOR CANADA ONLY

For warranty information and/or product returns, residents of Canada should contact Leviton in writing at **Leviton Manufacturing of Canada Ltd to the attention of the Quality Assurance Department, 165 Hymus Blvd, Pointe-Claire (Quebec), Canada H9R 1E9** or by telephone at **1 800 405-5320.**

LEVITON LIMITED WARRANTY

Leviton warrants to the original consumer purchaser and not for the benefit of anyone else that products manufactured by Leviton under the Leviton brand name ("Product") will be free from defects in material and workmanship for the time periods indicated below, whichever is shorter: • OmniPro II and Lumina Pro: three (3) years from installation or 42 months from manufacture date. • **Omni LTe, Omni IIe, and Lumina**: two (2) years from installation or 30 months from manufacture date. • **BitWise Controllers, Accessories**: two (2) years from installation or 30 months from manufacture date. • **Lumina Gateway Controllers**: two (2) years from installation or 30 months from manufacture date. • **Thermostats, Accessories**: two (2) years from installation or 30 months from manufacture date. • **Batteries**: Rechargeable batteries in products are warranted for ninety (90) days from date of purchase. **Note**: Primary (non-rechargeable) batteries shipped in products are not warranted. **Products with Windows® Operating Systems**: During the warranty period, Leviton will restore corrupted operating systems to factory default at no charge, provided that the product has been used as originally intended. Installation of non-Leviton software or modification of the operating system voids this warranty. Leviton's obligation under this Limited Warranty is limited to the repair or replacement, at Leviton's option, of Product that fails due to defect in material or workmanship. Leviton reserves the right to replace product under this Limited Warranty with new or remanufactured product. **Leviton will not be responsible for labor costs of removal or reinstallation of Product**. The repaired or replaced product is then warranted under the terms of this Limited Warranty for the remainder of the Limited Warranty time period or ninety (90) days, whichever is longer. This Limited Warranty does not cover PC-based software products. **Leviton is not responsible for conditions or applications beyond Leviton's control. Leviton is not responsible for issues related to improper installation, including failure to follow written Installation and operation instructions, normal wear and tear, catastrophe, fault or negligence of the user or other problems external to the Product**. To view complete warranty and instructions for returning product, please visit us at **www.leviton.com.**

COPYRIGHT AND TRADEMARK INFORMATION

This document and all its contents herein are subject to and protected by international copyright and other intellectual property rights and are the property of Leviton Manufacturing Co., Inc, its subsidiaries, affiliates and/or licensors.

Use herein of third party trademarks, service marks, trade names, brand names and/or product names are for informational purposes only, are/may be the trademarks of their respective owners; such use is not meant to imply affiliation, sponsorship, or endorsement.

No part of this document may be reproduced, transmitted or transcribed without the express written permission of Leviton Manufacturing Co., Inc.

© 2015 Leviton Mfg. Co., Inc.

WEB VERSION